E-11259-LM55W

INCANTO Series

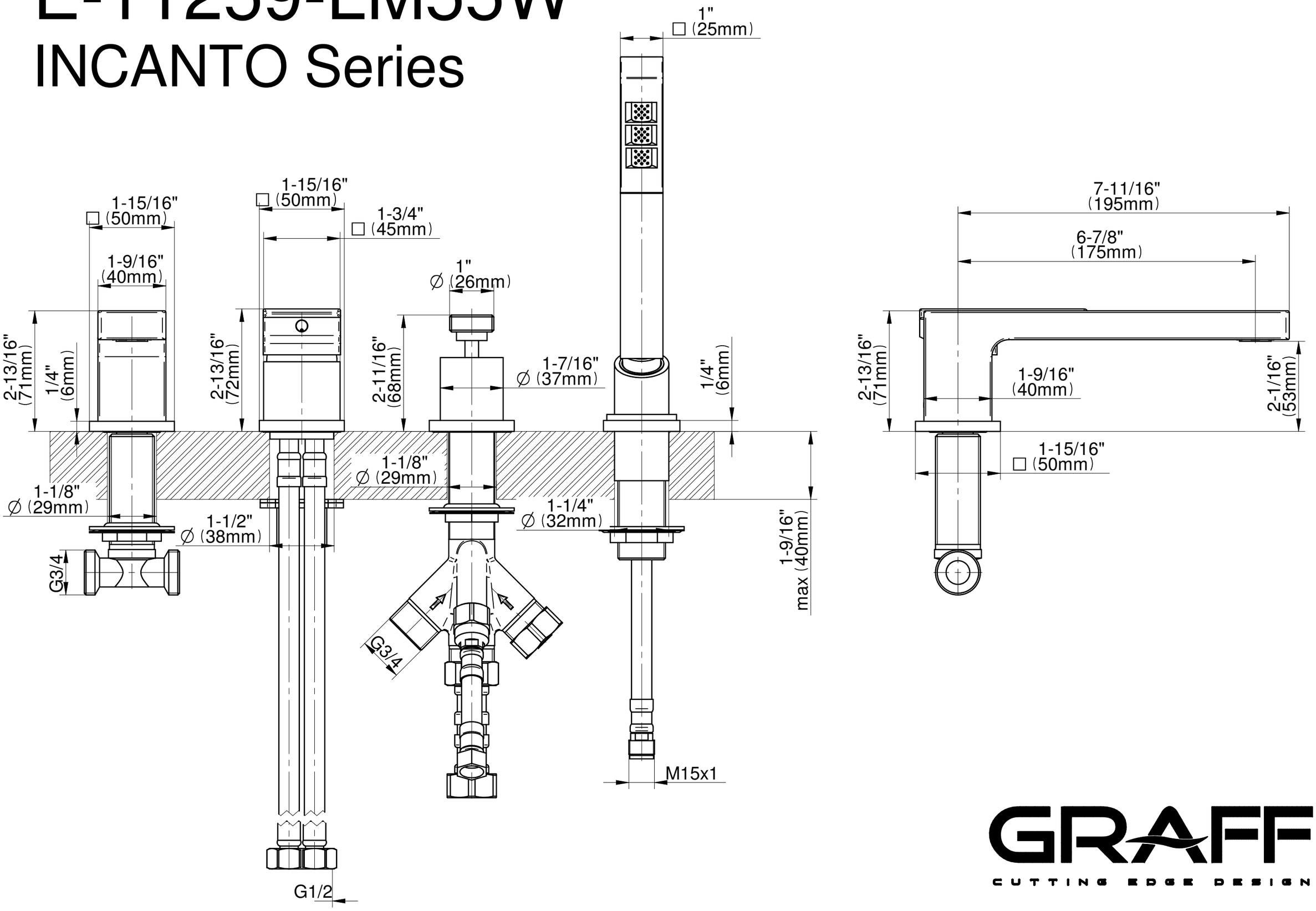

GRAFF®

CUTTING EDGE DESIGN