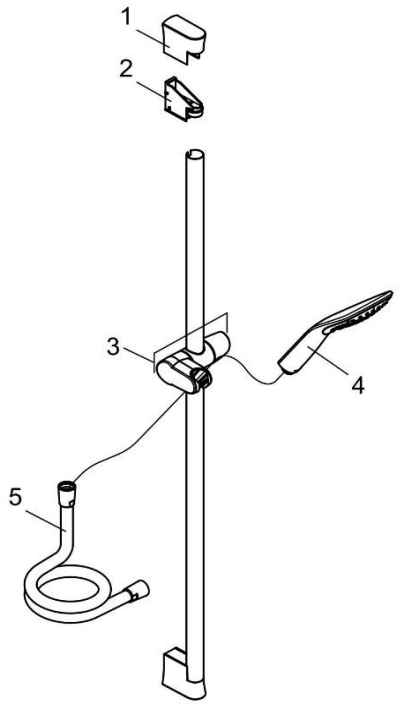

6764087-00		Brause- Set	shower set
1	93111105-00	ABDECKHÜLSE	COVER SLEEVE
2	93100805-00	WANDHALTER	WALLHOOK
3	7300305-00	GLEITSCHIEBER	GILDER
4	6760039-00	HANDBRAUSE	HANDSHOWER
5	6107239-00	BRAUSESCHLAUCH	SHOWER HOSE