DORN BRACHT

Dornbracht

Comfort Shower^{ATT}

Planning guide

Version 1.2

Culturing Life

Functions


BigRain


Seated shower


Affusion pipe


Scenarios

Scenarios use different functions in a pre-programmed sequence.

The COMFORT SHOWER[ATT] can be enhanced by the addition of the LEG SHOWER[ATT].

It is obligatory for technical planning, installation and initial commissioning to be accompanied by a certified system partner or by booking a Dornbracht service package.
Detailed information on the service package can be found at www.dornbracht-professional.com.

Exposed trim components

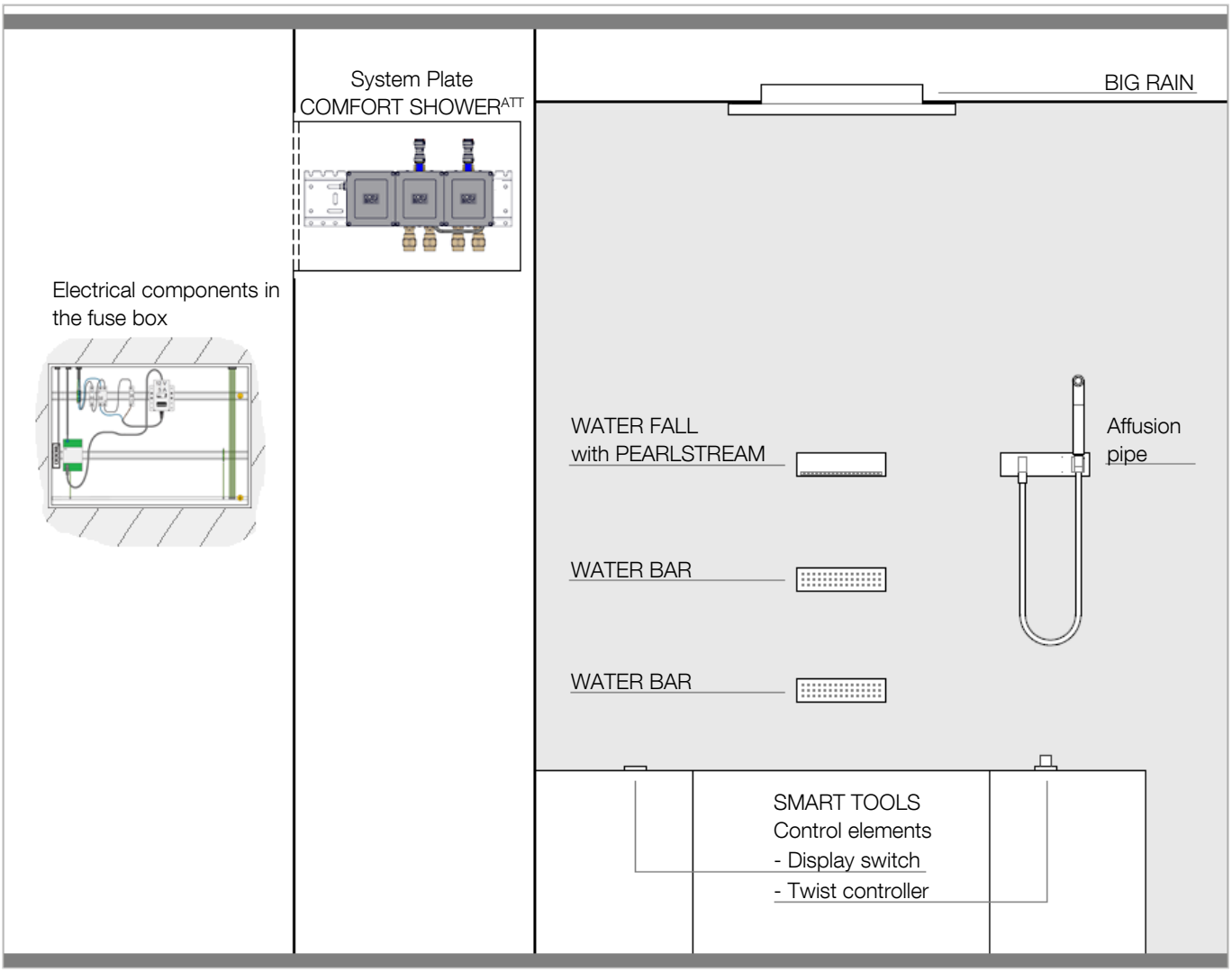

Electrical components supplied
(in the fuse box)

– DC filter 1 x 5 A

– 1 x power supply unit 100 – 240 V AC / 12 V DC, 5 A

Additional components supplied but not shown:

– 4 x eVALVE

Concealed rough components

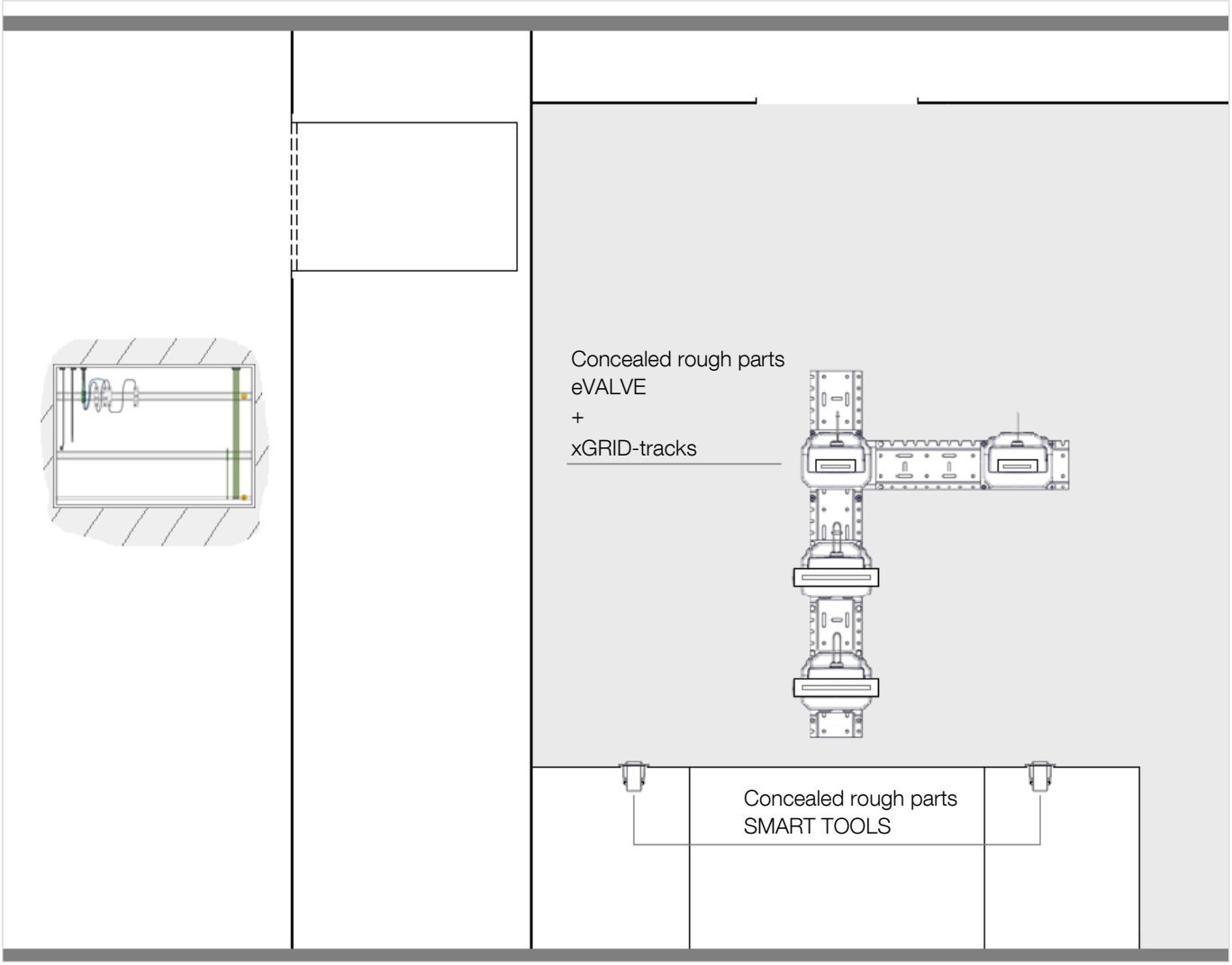

Additional components supplied but not shown:

Electrical components
– 1 x cable (12 V DC, 5 A)
– 5 x equipotential bonding cable (4 mm² / AWG 11)
– 8 x VBUS cable
– 1 x Ethernet cable (CAT 7)

Plumbing components
– 2 x stop valve (DN 20)
– 2 x strainer (DN 20)
– 2 x Y press and flush device
– 1 x BIG RAIN connector set

Safety zones

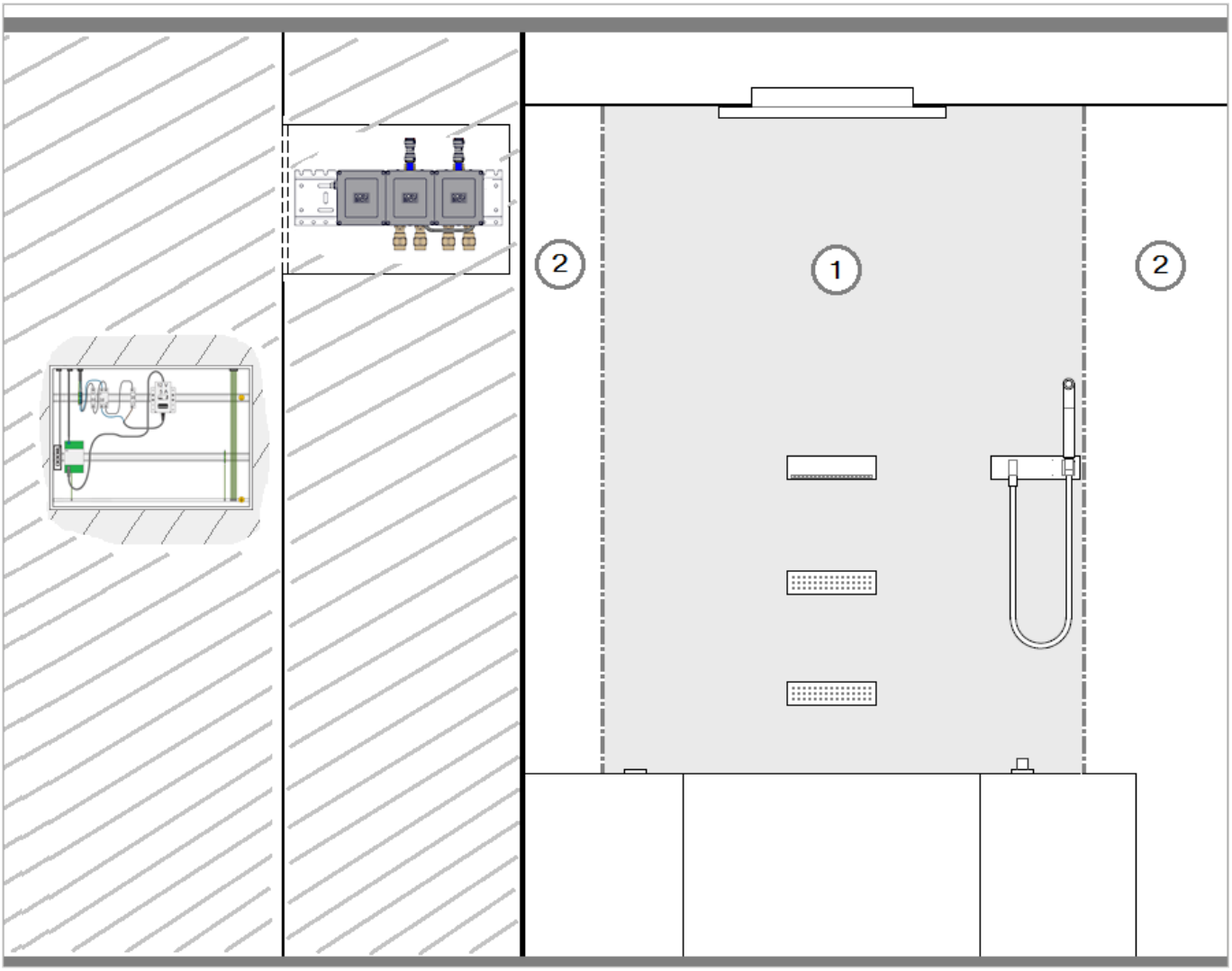

Comply with the regulations for safety zones in accordance with DIN VDE 0100, Part 701.

Please conform to national statutory regulations, where different.

Observe the protection rating of each electrical component, only applicable once the device is fully installed.

The following electrical components must be installed outside safety zones 0 – 2:

Fuse box, System Plate

As the WATER FALL with PEARLSTREAM, WATER BAR, affusion pipe and SMART TOOLS control elements are operated by safety extra-low voltage (12 V), they can be installed in safety zone 1.

Positioning

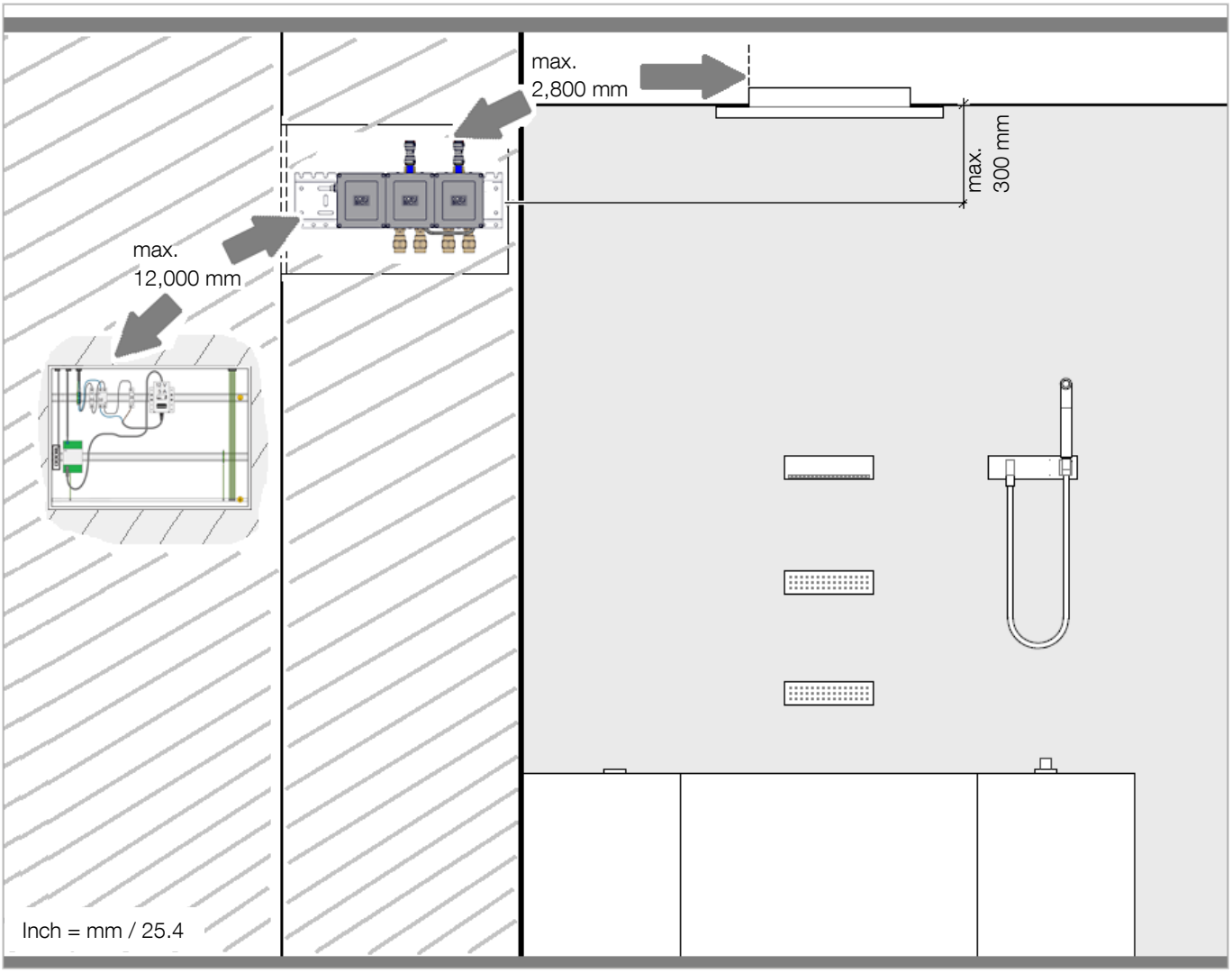

The System Plate and power supply installations must be physically separate.

The System Plate must not be installed above the power supply.

Fuse box with electrical components

– 12,000 mm / 39 ft 4-3/8" maximum distance to the System Plate
– outside the wet zone
– accessible for inspection
– 5 – 35 °C / 41 – 95 °F ambient temperature

System Plate

– 2,800 mm / 9 ft 2-1/4" maximum distance from the System Plate to BIG RAIN
– 300 mm / 11-3/4" maximum height difference from the System Plate to BIG RAIN
(centre of xGRID track / top edge of suspended ceiling)
– accessible for inspection
– 5 – 55 °C / 41 – 131 °F ambient temperature

Pre-wall system

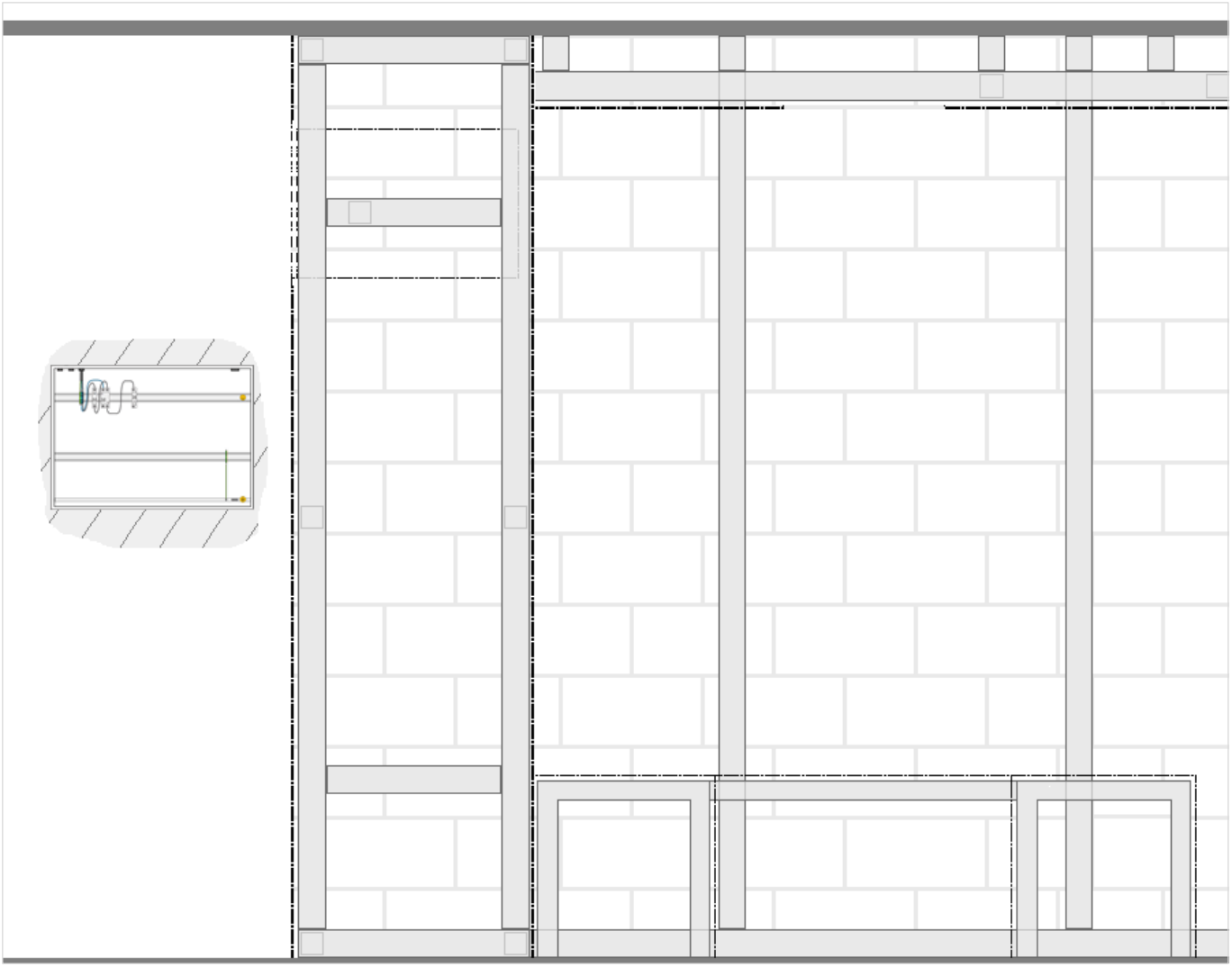

The recess depths required for the WATER FALL with PEARLSTREAM, WATER BARS, affusion pipe and BIG RAIN make it essential to have a pre-wall system at the wall and ceiling.

The System Plate can be perfectly positioned in a lightweight wall.

Provide a bench construction with adequate structural strength. The top of the bench needs to slope slightly so that the water can drain.

The proper execution of the pre-wall installation, can ensure compliance with soundproofing, heat insulation and fire protection standards.

Pre-wall installation systems are available from various suppliers (e .g. Geberit, Tece, Viega, etc.).

Pre-wall installations can also be implemented with C-profiles (e. g. Knauf, Rigips Saint-Gobain, Sheetrock, Siniat, etc.).

Wood can also be used, unless this contravenes the regulations of the country concerned.

Operating conditions

Application

The product is not designed for outdoor use.
Dornbracht must be consulted before operating the device in a steam, chlorine or salt-laden atmosphere.
Water quality must be ensured by installing a filter or a water conditioning system.
Major differences between the hot and cold water supply must be balanced.

Maximum permissible relative humidity (without condensation)	95 %

Permissible ambient temperatures

BIG RAIN	5 – 55 °C / 41 – 131 °F
System Plate	5 – 55 °C / 41 – 131 °F
SMART TOOLS control elements	5 – 35 °C / 41 – 95 °F
Storage	5 – 35 °C / 41 – 95 °F

Store somewhere dust-free and dry.

Permissible operating temperatures

Measuring point: Concealed rough parts for eVALVE (affusion pipe)

Cold water temperature	5 – 20 °C / 41 – 68 °F
Hot water temperature	55 – 65 °C /131 – 149 °F
Recommended hot water temperature	60 °C / 140 °F
Thermal disinfection (max. 15:00 mins.)	75 °C / 167 °F

Flow pressure

Measuring point: Concealed rough parts for eVALVE (affusion pipe)

Permissible flow pressure	250 – 400 kPa / 36 – 58 psi / 2.5 – 4 bar
Recommended flow pressure	300 kPa / 44 psi / 3 bar

Fit a speed-controlled pressure booster in the main pipe, if necessary.

Water hardness

Recommended water hardness: 6 – 7 °dH / 107 – 125 ppm / 7.5 – 8.8 °e / 10.7 – 12.5 °fH

Fit a water softener into the main pipe, if necessary. The reduction in pressure caused by the water softener must be taken into account.

Basic dimensions

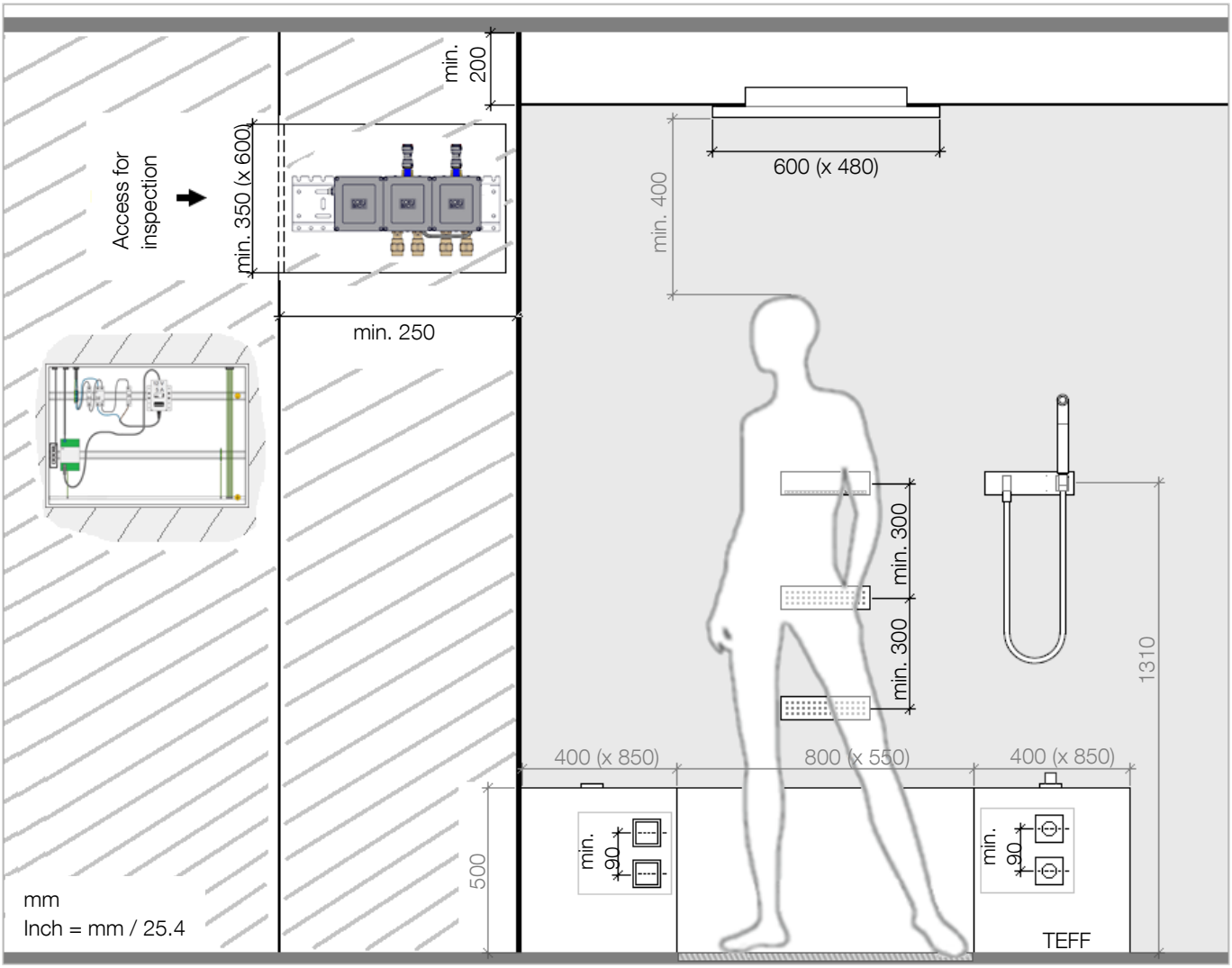

- 200 mm / 8" minimum distance of the suspended ceiling to the bottom edge of the finished ceiling
- 350 x 600 mm / 1 ft 1-5/8" x 1 ft 11-5/8" minimum size of the inspection opening
- 250 mm / 10" minimum thickness of the lightweight wall
- 300 mm / 11-3/4" minimum distance (centre / centre) of concealed rough parts for WATER FALL with PEARLSTREAM, WATER BARS
- 90 mm / 3-1/2" minimum horizontal and/or vertical distance (centre / centre) for SMART TOOLS
  - The distance must never be less than this!-
- 400 mm / 1 ft 3-5/8" recommended minimum distance between BIG RAIN and the user
- 1,310 mm / 4 ft 3-5/8" recommended height difference between the top edge of the finished floor (TEFF) and the affusion pipe for a person 1,750 mm / 5 ft 9" tall
- 500 mm / 1 ft 7-3/4" recommended seat height
- 800 x 550 mm / 2 ft 7-1/2" x 1 ft 9-5/8" recommended seat size
- 400 x 850 mm / 1 ft 3-5/8" x 2 ft 9-5/8" recommended size of the sides

Standard construction

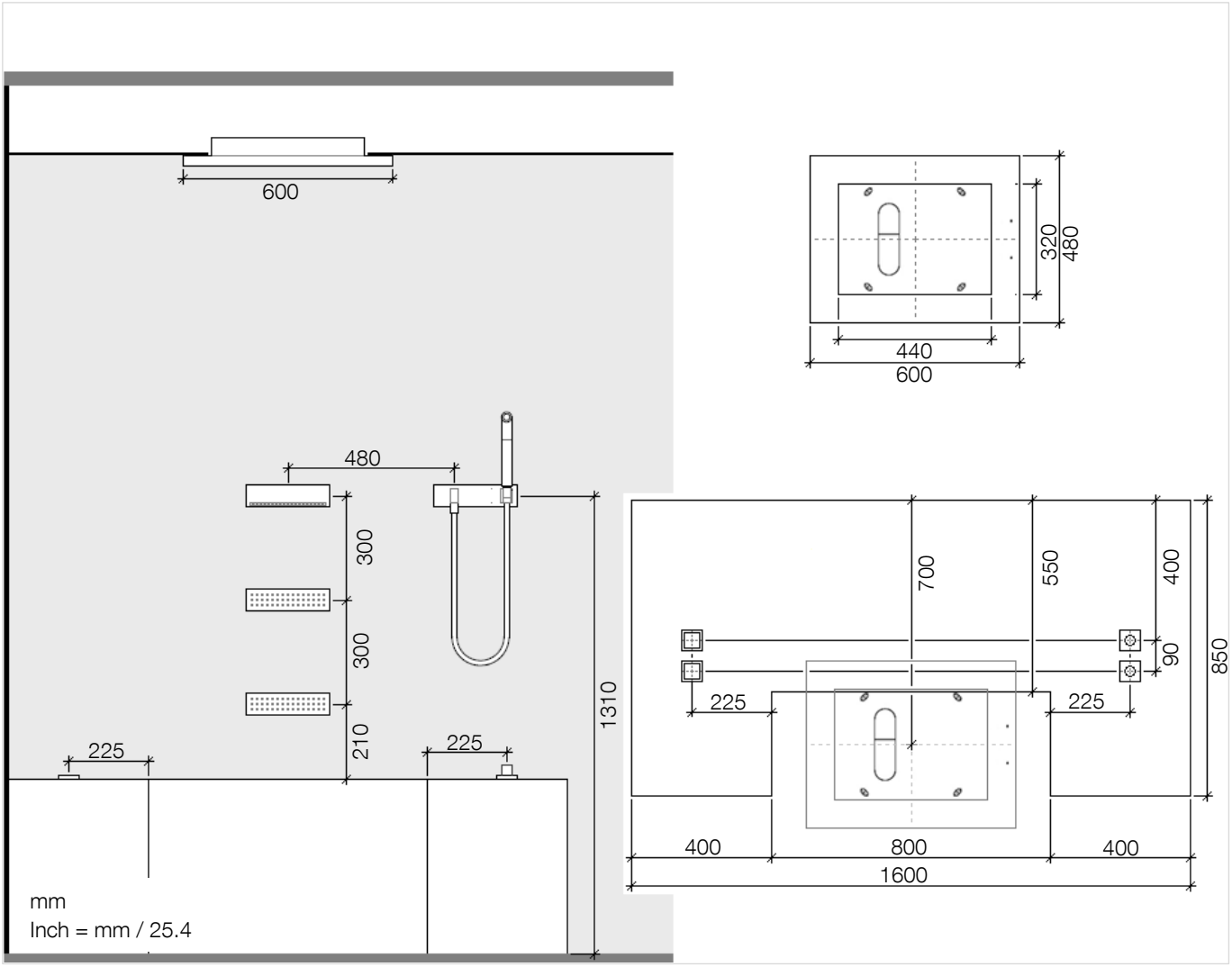

The positions and dimensions can be adapted to meet individual needs.

See installation examples.

Cutouts / attachment points

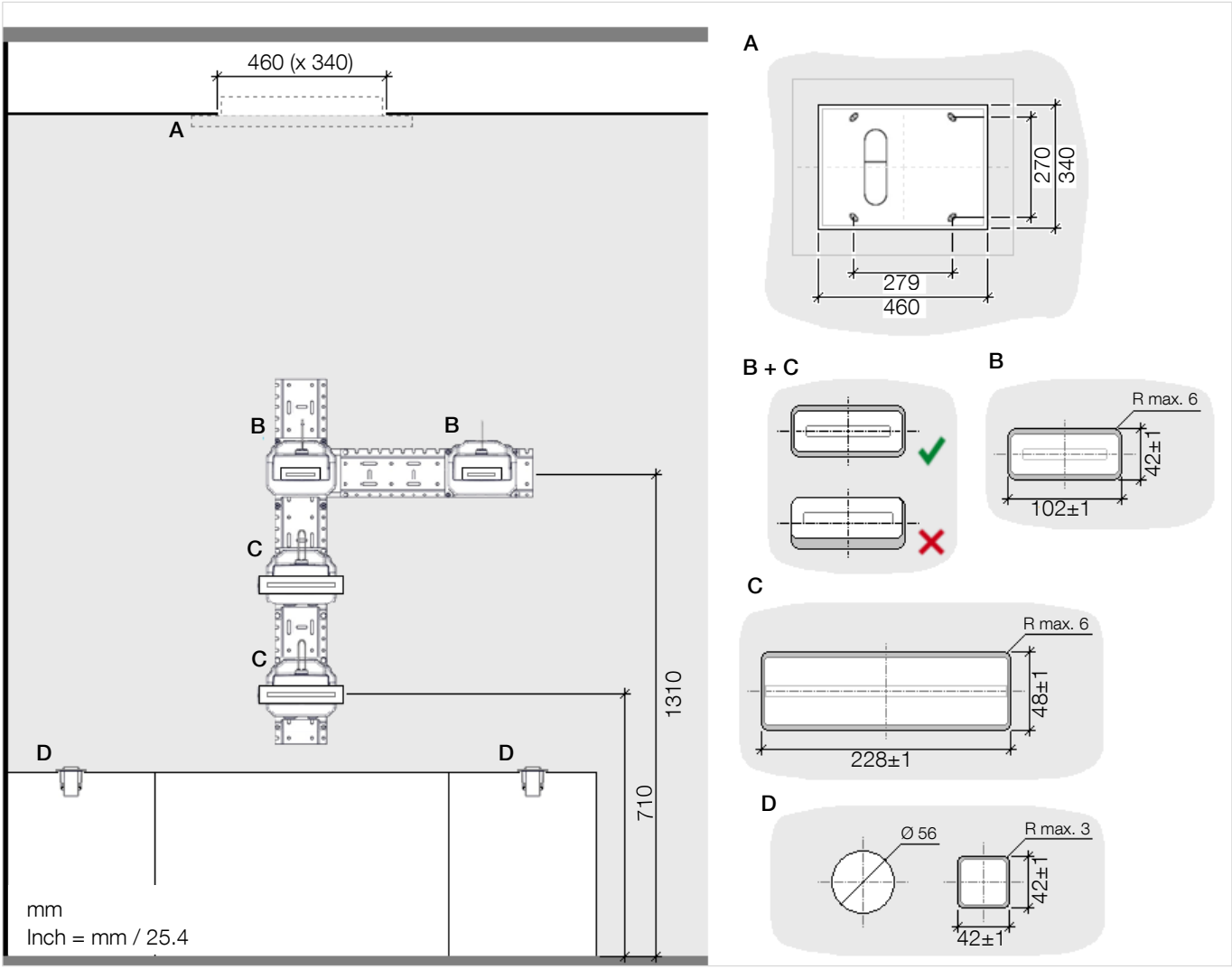

A – BIG RAIN

B – WATER FALL with PEARLSTREAM and affusion pipe

C – WATER BARS

D – SMART TOOLS control elements

[!] The concealed rough parts for eVALVES and SMART TOOLS, as well as the VBUS cable must be fitted and tested before the pre-wall is closed.

For the control elements:

– Ø 56 mm drilled hole in the panelling for the concealed rough parts

– 42±1 x 42±1 mm cutout in the wall construction (tiles, natural stone, etc.)

Pre-wall system

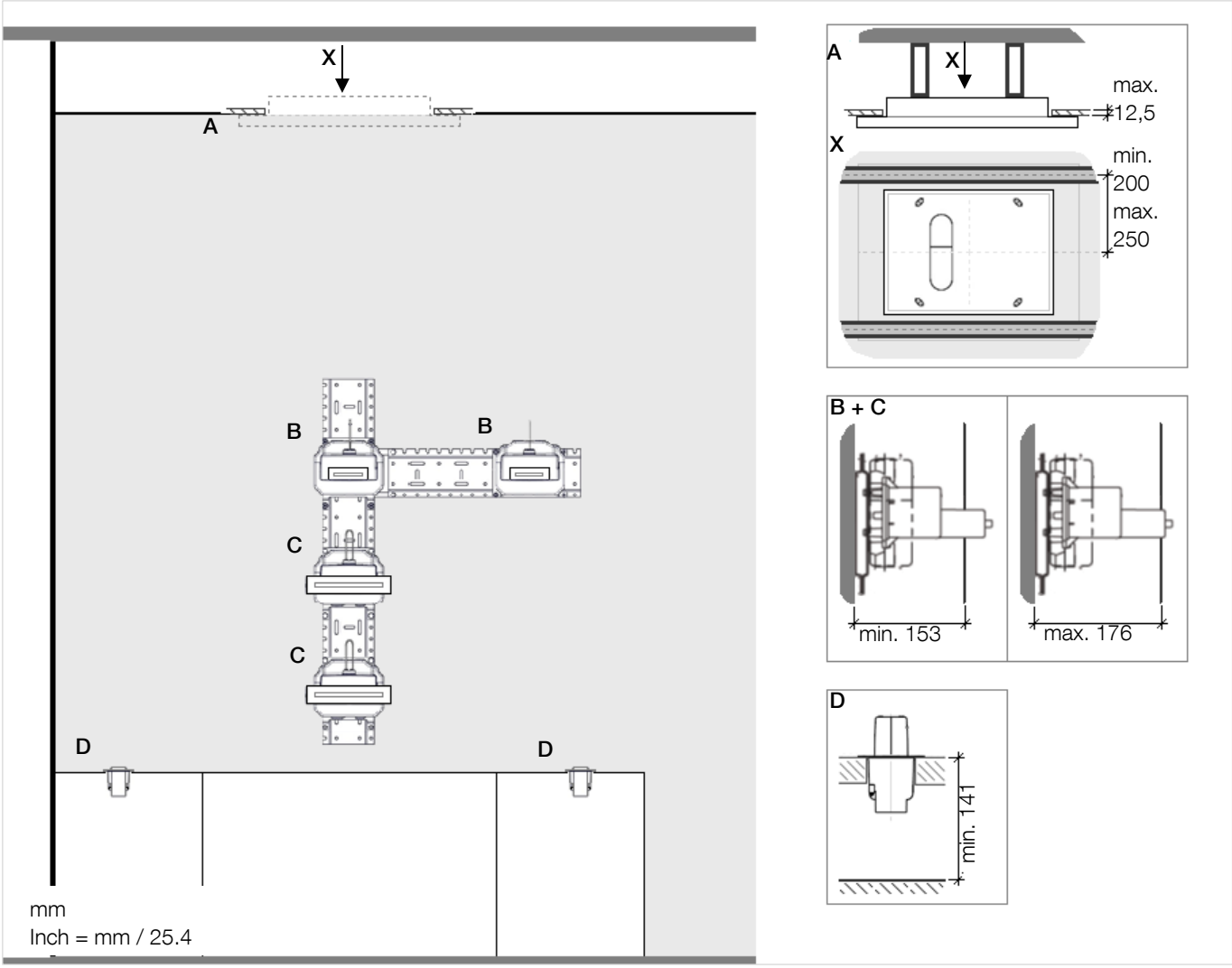

The weight of the ceiling construction must not be carried by BIG RAIN.

– 12.5 mm / 1/2" maximum thickness of the ceiling panelling

Profiles must be attached along the longer sides of the ceiling cutout.

– 200 – 250 mm / 8" – 10" (centre / centre) distance between BIG RAIN and the profiles of the ceiling construction

Note the recess depths of the components.

The SMART TOOLS concealed rough parts are fitted in the surface panelling of the bench.

Dry wall construction

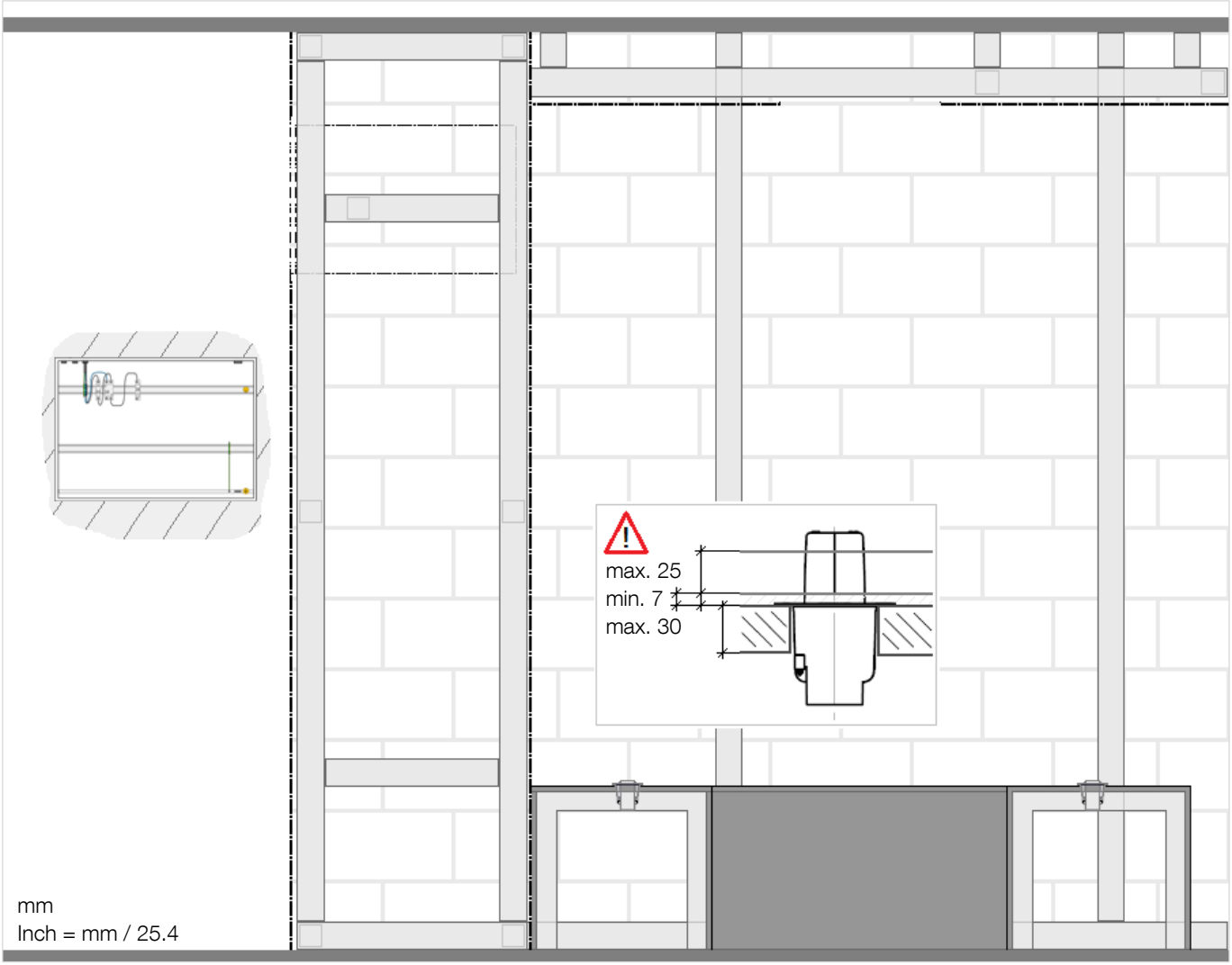

– 30 mm possible maximum thickness of the panelling for the control elements.
– 7 – 25 mm construction (tiles, natural stone, etc.), possible in front of the (plasterboard, etc.), panelling for the control elements.
– The concealed rough parts of SMART TOOLS and the VBUS cable must be fitted before the bench is closed. Relevant openings must be taken into account.

BigRain

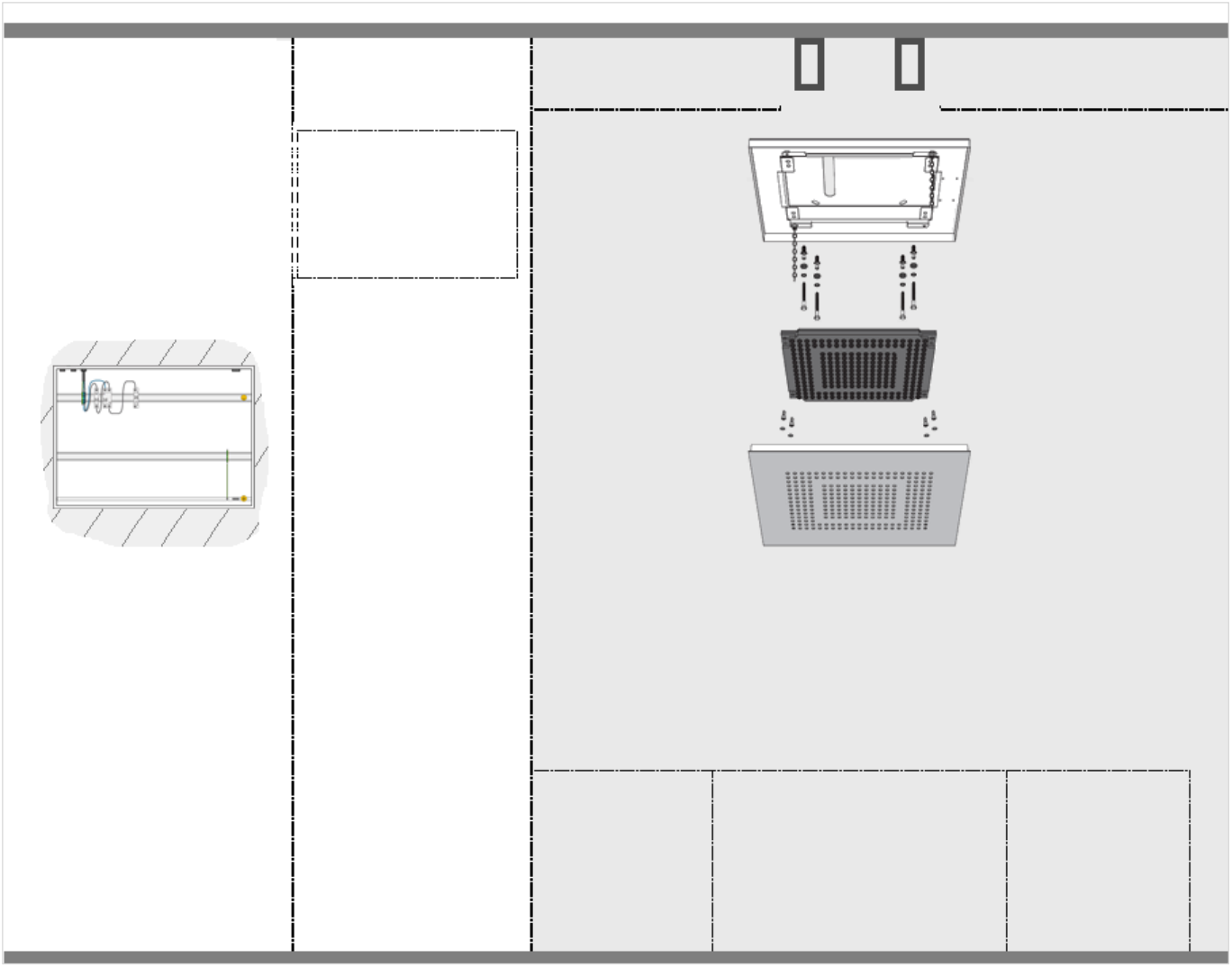

A ceiling construction with adequate structural strength for the permanent attachment of BIG RAIN (weight: 12 kg / 26.5 lbs (US)) is essential.

⚠ It takes 2 people to fit BIG RAIN!

⚠ Only use suitable ladders / climbing aids.

⚠ Wear safety gloves.

The fixing materials included among the items supplied are only suitable for mounting in concrete.

A structural engineer must design a suitable structure to span the distance between BIG RAIN and the ceiling (at least 150 mm / 6").

A structural engineer should select suitable fixing materials for the particular ceiling.

Fuse box

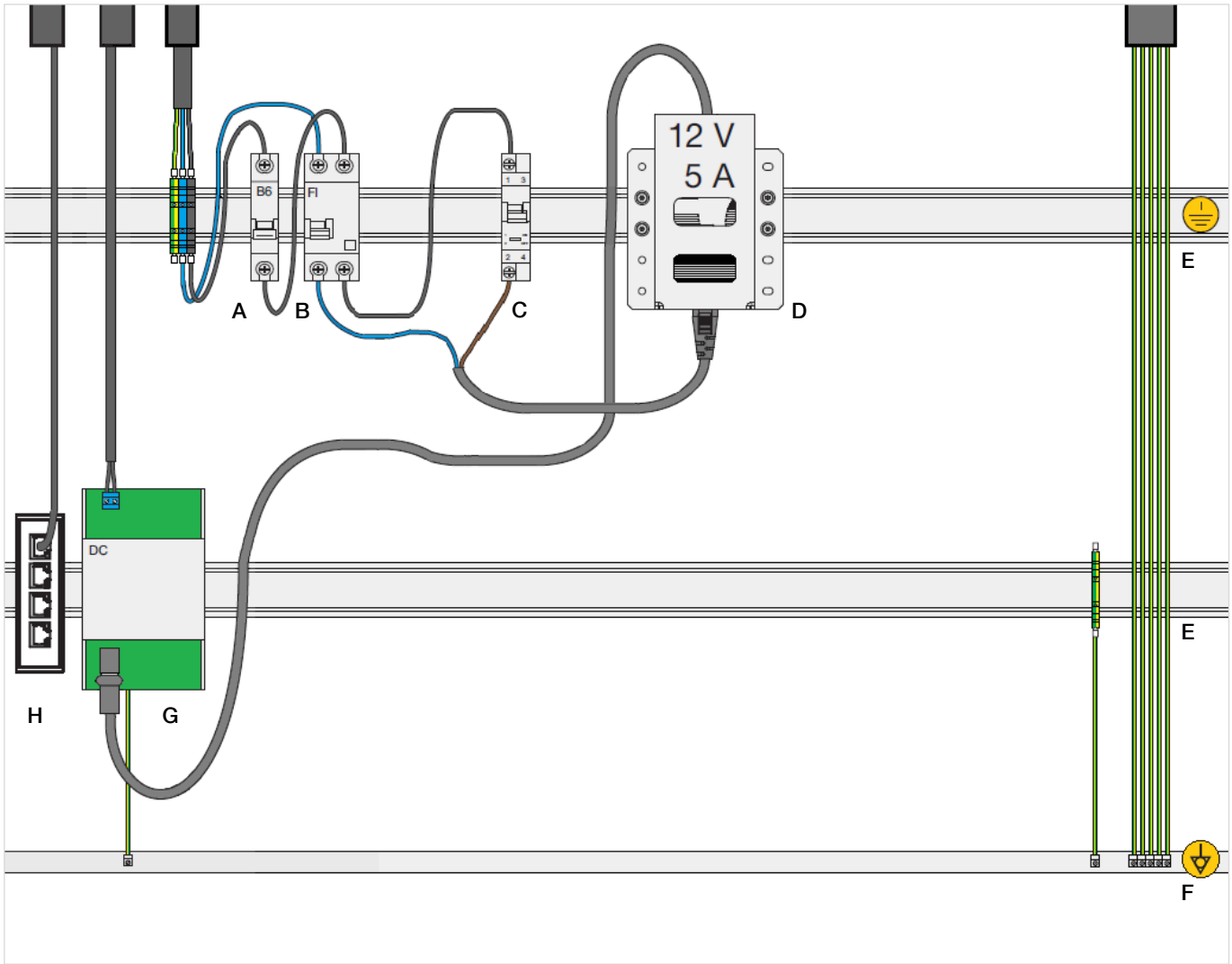

Space required for electrical components in the fuse box: min. 500 x 500 x 150 mm / 1 ft 7-3/4" x 1 ft 7-3/4" x 6" (inside).

Electrical components (scope of supply)

D – Power supply unit 100 – 240 V AC / 12 V DC, 5 A

G – DC filter 1 x 5 A

The customer must provide the following circuit breakers and electrical components:

A – Safety cut-out (6 A, type B)

B – Earth-leakage circuit breaker (30 mA 2-pin, type A)

C – 1 x circuit-breaker switch (16 A)

E – 2 x DIN rail mounting TS 35

F – Equipotential bonding strip

Connect the equipotential bonding strip to the main grounding bar

H – A network socket (**H**) wired in accordance with TIA 568A is required to connect the COMFORT SHOWER^{ATT} device to a network. The local network must reside behind a router protected by a firewall.

Standard installation

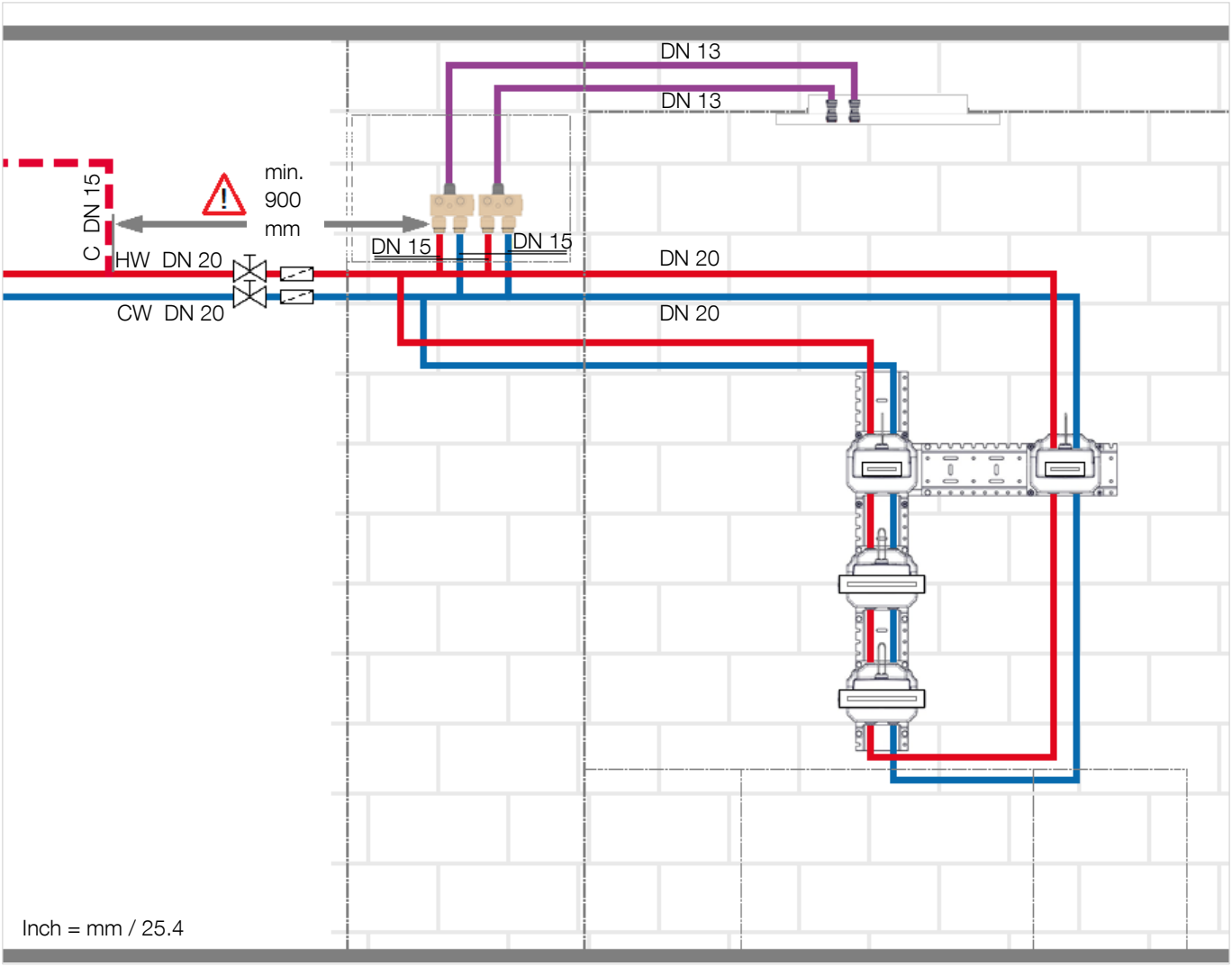

Required nominal diameter (DN) for pipes and fittings:

– DN 20 – hot and cold water pipe (HW + CW)

– DN 20 – ring main (loop)

– DN 15 – System Plate feed pipes

Scope of supply:

– DN 13 – BIG RAIN feed pipes

– 900 mm / 2 ft 11-3/8" minimum distance between the circulation pipe connection (C) and the first eVALVE of the COMFORT SHOWER[ATT]

The following components for the hot and cold water pipe (HW + CW) must be positioned so that access is possible at all times (accessible for inspection):

– 2 x stop valve (DN 20)

– 2 x strainer (DN 20)

Schematic diagram

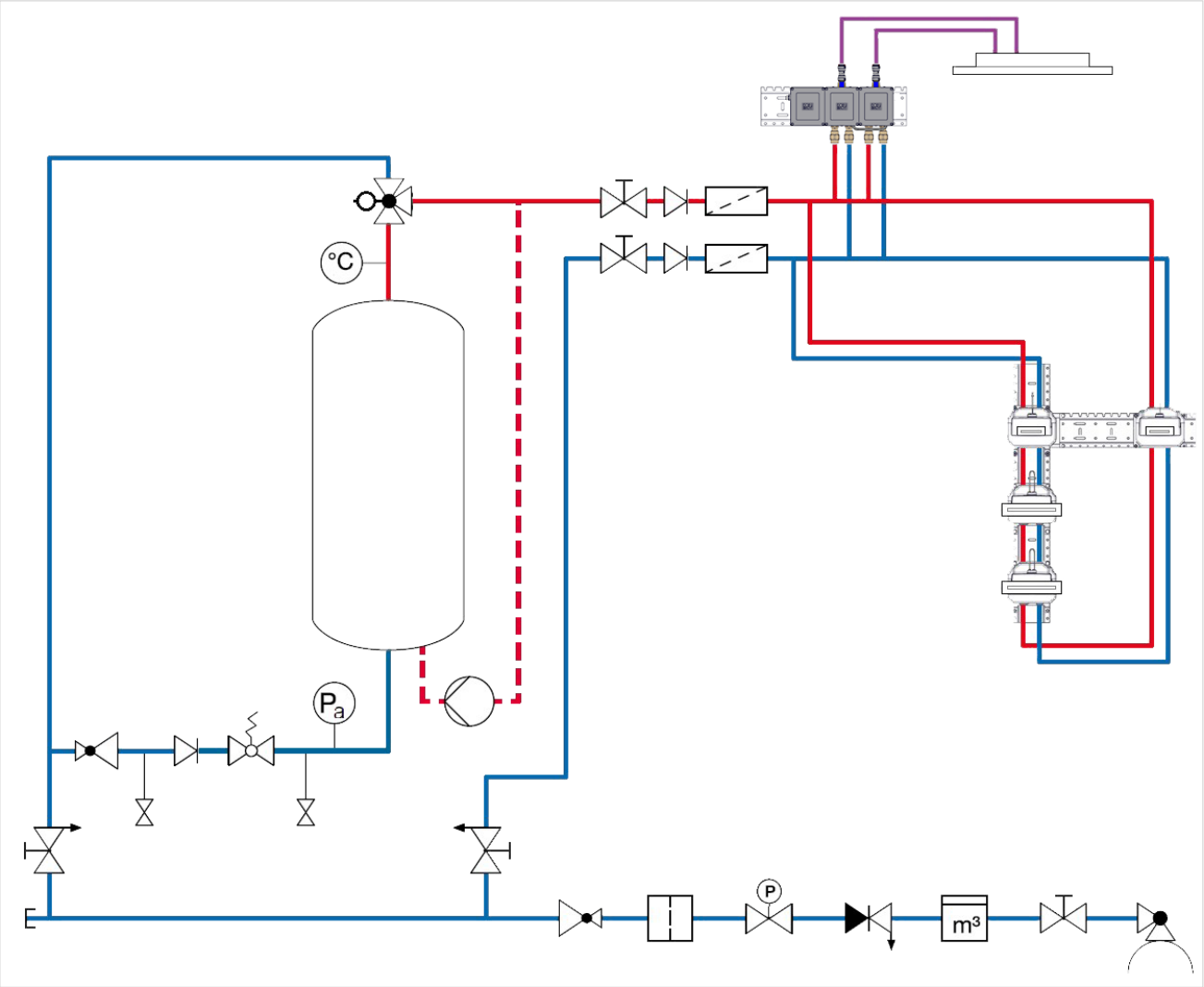

Typical installation under EN 1717.

Please conform to national statutory regulations, where different.

Provided by customer:

– Filter (main pipe)

– Pressure reducing valve (main pipe)

Key on next page

Key

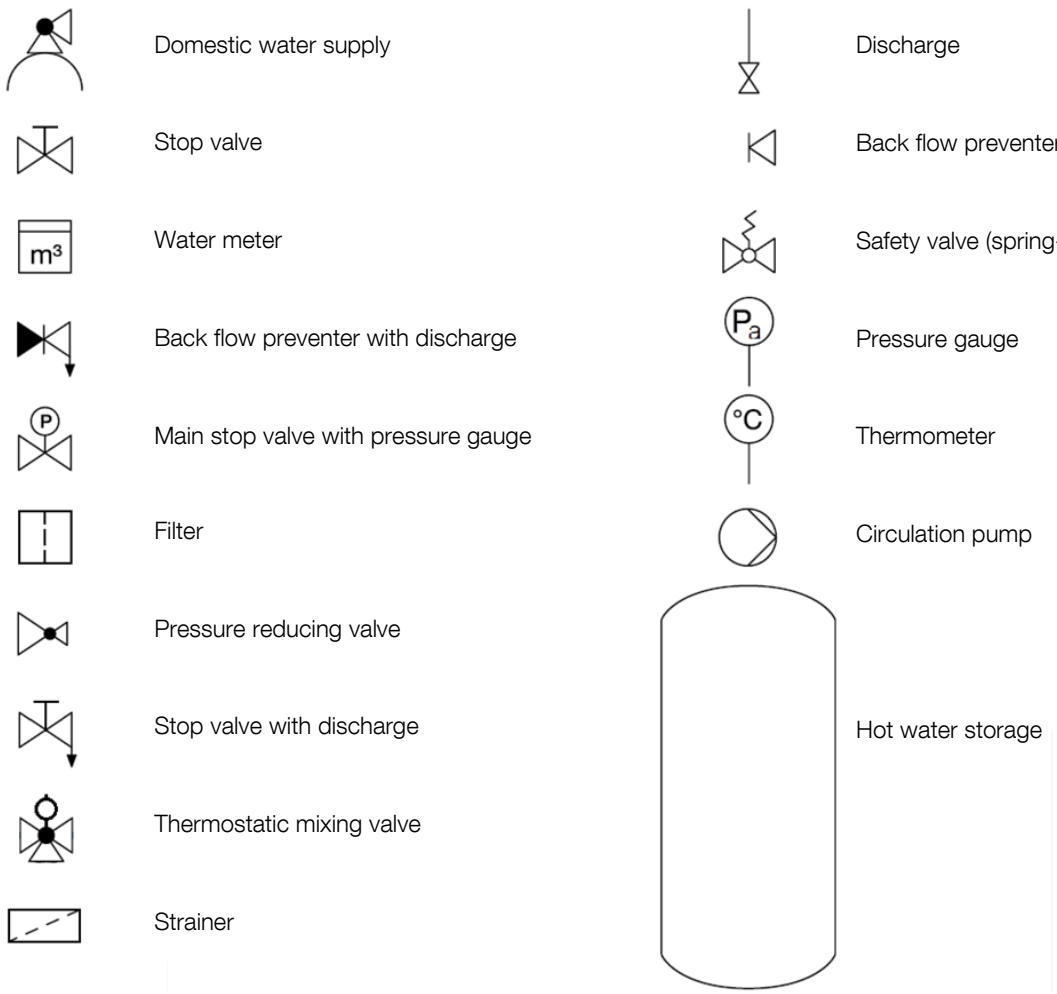
Domestic water supply
Stop valve
Water meter
Back flow preventer with discharge
Main stop valve with pressure gauge
Filter
Pressure reducing valve
Stop valve with discharge
Thermostatic mixing valve
Strainer
Discharge
Back flow preventer
Safety valve (spring-loaded)
Pressure gauge
Thermometer
Circulation pump
Hot water storage

Plumbing information

Pipework calculation

The pipework must be calculated in accordance with EN 806-3, DIN 1988-300.

The simultaneous use of all other outlet points must be considered (simultaneity).

Pressure reducing components of the COMFORT SHOWER[ATT]:

– Stop valve	1.2 kPa / 0.174 psi / 0.012 bar
– Strainer	14 kPa / 2.03 psi / 0.14 bar

Pressure-reducing components provided by the customer:

– Water meter	max. 100 kPa / 14.5 psi / 1 bar
– Filter	max. 20 kPa / 2.9 psi / 0.2 bar
– Pressure reducing valve (main pipe)	see manufacturer's specification
– Water softener, if necessary	see manufacturer's specification

Install a speed-controlled pressure booster, if necessary (e. g in accordance with DIN 1988-500).

Hot water system

To select the ideal hot water supply – taking additional tapping points and simultaneous use into account – it is essential to assess the demand on an individual basis (e. g. in accordance with DIN 1988-200, DIN 4708-2, DIN 4753-7, VDI 6003).

If the hot water temperature is set to more than 65 °C / 149 °F, a thermostatic water mixer must be installed behind the hot water supply (e. g. for solar heated systems).

If regular disinfection is required, the customer must provide a relevant (manually or automatically operated) means of bypassing the thermostatic water mixer.

Floor drain

To select the ideal drain – taking the flow rate of the entire installation into account – it is necessary to assess demand on an individual basis. (e. g. in accordance with EN 12056-1/-2, DIN 1986-100).

Recommended drainage capacity/drain connection value [DU value]	1.8 l/s / 0.5 gps
Recommended drain pipe size	DN 75 / NPS 3"

Internal plumbing

It is essential for the entire installation to be flushed with clean water (in compliance with the applicable guidelines for flushing).
A flushing report must be prepared (e. g. EN 806-4 / DIN 1988-200).

Flush before fitting the exposed trim parts and commissioning.

It is essential to run a pressure test of the entire installation. For the exact pressure test procedure (preliminary test / main test), based on the material used for the pipes, please see the currently valid directives (EN 806-4, DIN 1988-200, etc.). A test report must be prepared.

Schematic diagram

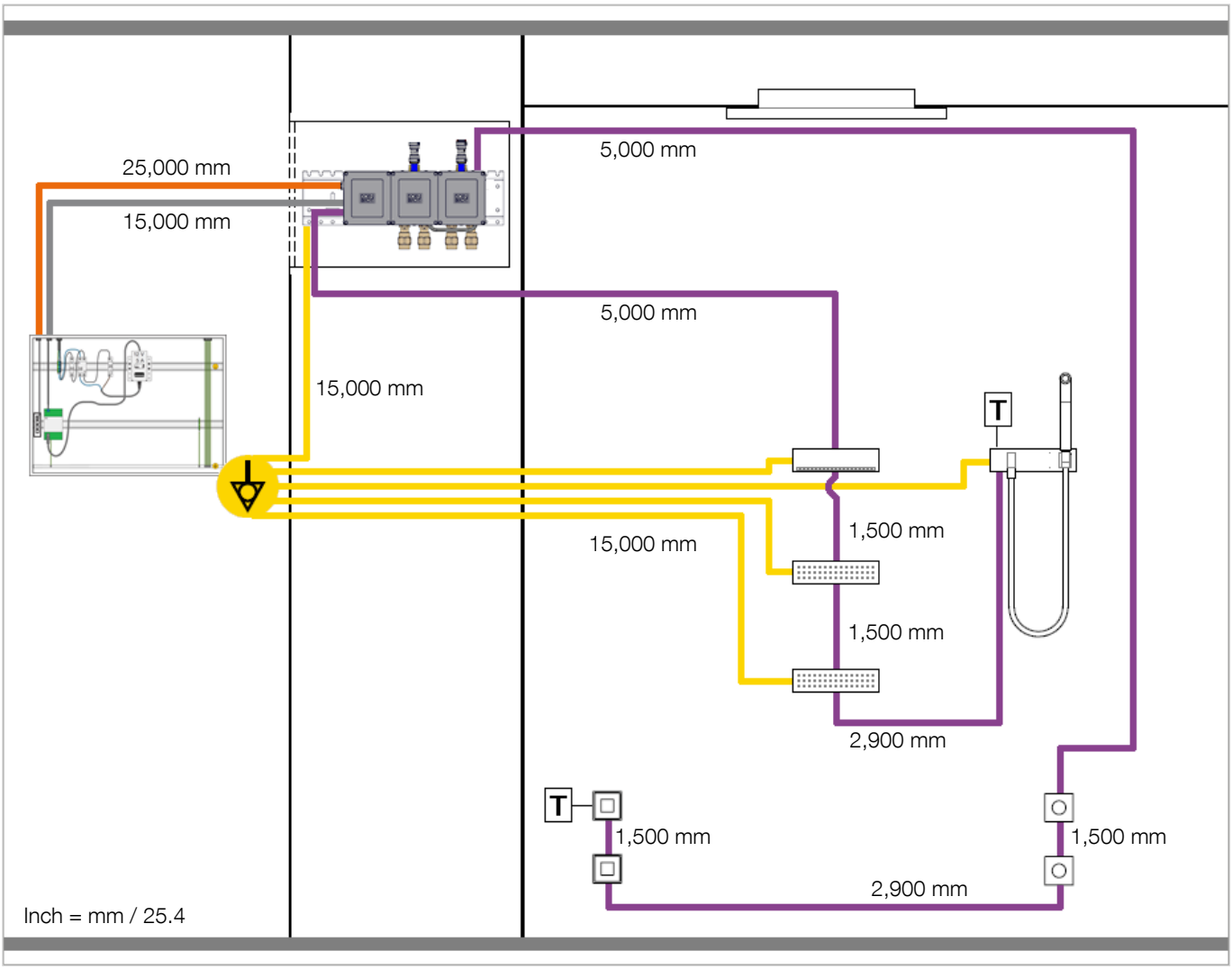

= cable (12 V DC)
= Ethernet cable (CAT 7)
= VBUS cable
= equipotential bonding cable (4 mm² / AWG 11)

= equipotential bonding
T = terminator

The length specifications relate to the condition on delivery.

Conduits

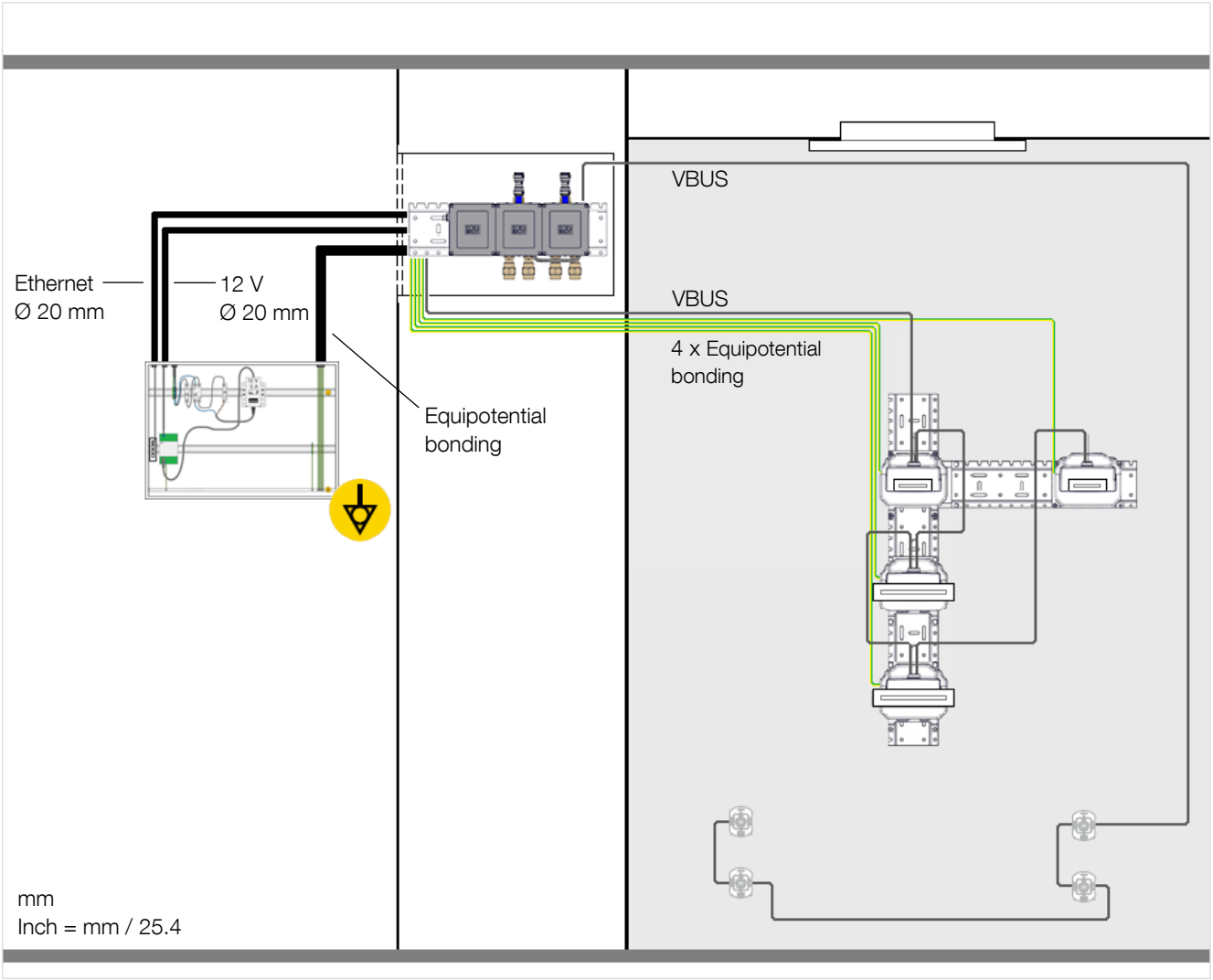

Provided by customer:

- 1 x conduit Ø 32 mm / Ø 1-1/4" to max. 12,000 mm / 39 ft 4-3/8" (for the equipotential bonding cable from the fuse box to the System Plate)
- 1 x conduit Ø 20 mm / Ø 3/4" to max. 12,000 mm / 39 ft 4-3/8" (for the System Plate equipotential bonding cable and the Ethernet cable from the fuse box to the System Plate)
- 1 x conduit Ø 20 mm / Ø 3/4" to max. 12,000 mm / 39 ft 4-3/8" (for the power supply from the fuse box to the System Plate)

⚠ Do not roll up excess cable lengths. Shorten the excess cable lengths or fasten them in a meandering pattern.

As part of the cable length is required for connection, the conduits must be correspondingly shorter.

Fuse box wiring diagram

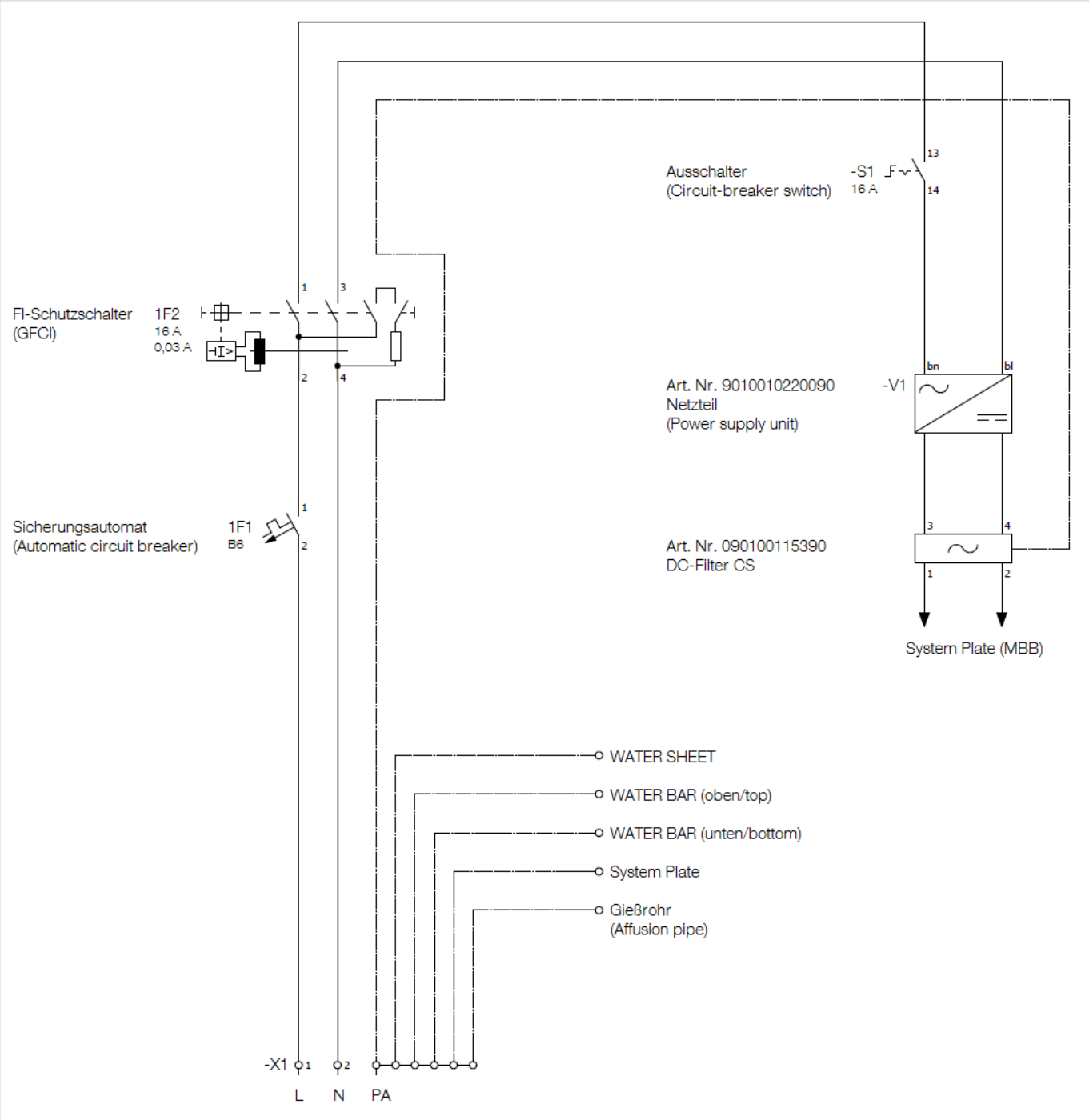

Electrical information

Electrical installation

Only connect to the electricity supply when the device is voltage-free.

⚠ Inexpertly completed electrical installations and electrical installations that are not completed as stipulated in this guide can cause electric shocks which could result in serious injury or even death, as well as damage to property.

The electrical installation must be implemented in accordance with IEC 60364-4-41 and DIN VDE 0100 by a qualified electrician. Please conform to national statutory regulations, where different.

Combine the devices only with original Dornbracht components.

Equipotential bonding

⚠ Do not create equipotential bonding over water pipes.

It is essential to use and/or install equipotential bonding cables (4 mm² / AWG 11).

Provided by customer:

– Fuse box in accordance with planning requirements
– Safety cut-out (6 A, type B)
– Earth-leakage circuit breaker (30 mA, 2-pin, type A),
– 1 x circuit-breaker switch (16 A)
– 2 x DIN rail mounting TS 35
– Equipotential bonding strip
– Network connection in accordance with TIA 568A, if necessary

Alternative positions

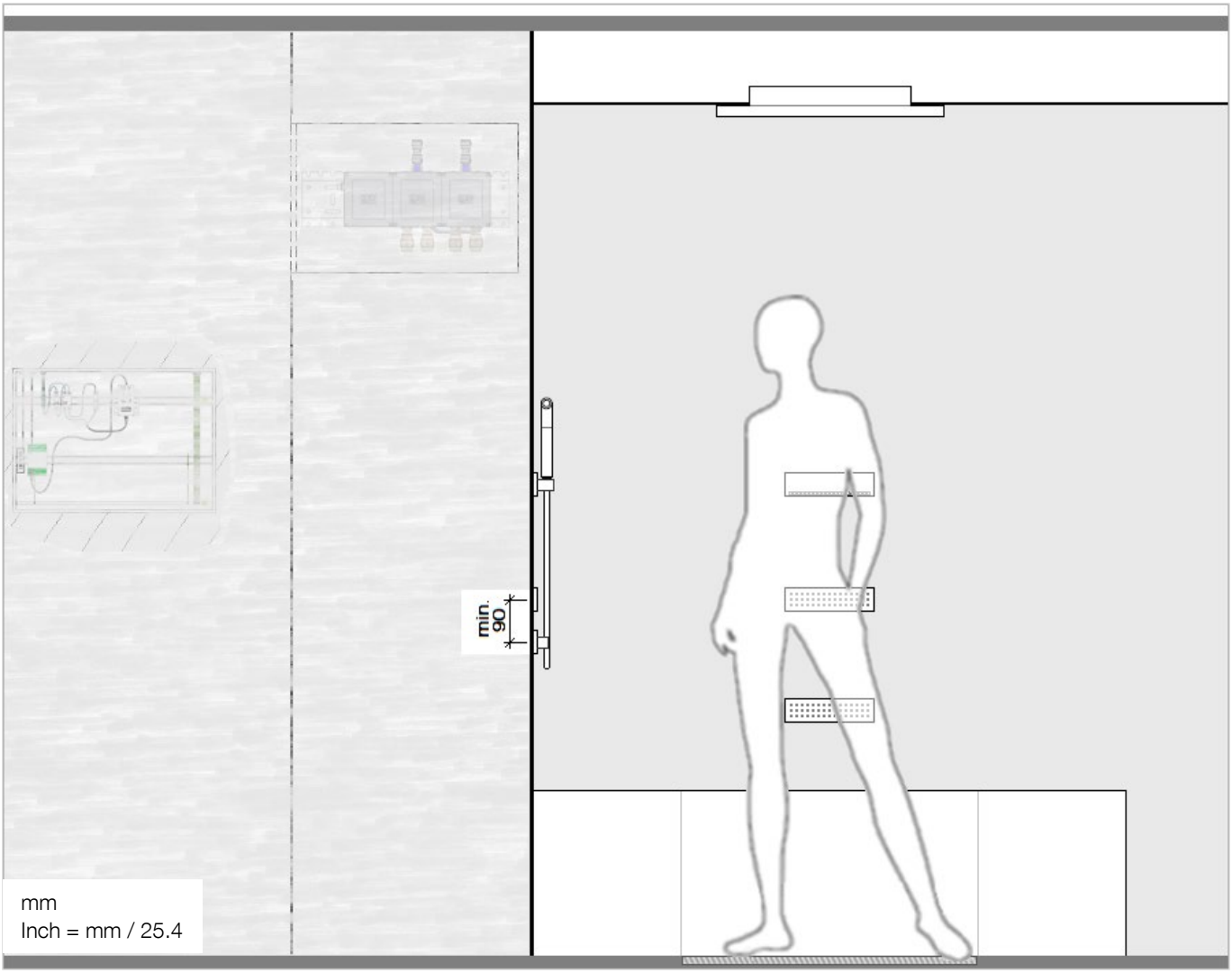

Important for planning:

– A pre-wall system is essential for the ceiling module (BIG RAIN + System Plate), WATER FALL with PEARLSTREAM, WATER BARS, affusion pipe and control elements.
– 1,400 mm / 4 ft 7-1/8" maximum height of the closed pre-wall, to allow the concealed rough parts of SMART TOOLS and the VBUS cable to be fitted.
– Installation of the water pipes, cables and conduits must be planned.
– See the schematic diagram on page 20 for the cable lengths
– The VBUS connection of the electrical components (daisy chain) must finish with a terminator.
– No more than 5 components should be connected one after the other in the daisy chain.
Dornbracht must be consulted in advance about installations that differ from the planning information.
– The total length of the daisy chain must not exceed 30,000 mm / 98 ft 5-1/8“.

Comfort Shower^{ATT}

COMFORT SHOWER 41 321 979-83:

polished stainless steel BIG RAIN rain panel for ceiling or ceiling substructure installation (85),

polished chrome WATER FALL with PEARLSTREAM (00),

polished chrome WATER BAR (00),

polished chrome affusion pipe with cover plate (00),

polished chrome SMART TOOLS (00)

COMFORT SHOWER 41 321 979-89:

brushed stainless steel BIG RAIN rain panel for ceiling or ceiling substructure installation (86),

platinum matt WATER FALL with PEARLSTREAM (06),

platinum matt WATER BAR (06),

platinum matt affusion pipe with cover plate (06),

platinum matt SMART TOOLS (06)

Product specification

- Exposed trim parts

1 x BIG RAIN rain panel for ceiling or ceiling substructure installation

- head spray 200 x 160 mm, 99 nozzles
- body spray 360 x 280 mm, 142 nozzles
- cover plate, stainless steel 600 x 480 mm

1 x WATER FALL with PEARLSTREAM

- 22 mm projection
- Jet regulator with 36 single jets 216 x 10 mm
- WATER FALL with PEARLSTREAM cover plate, 240 x 60 mm

2 x WATER BAR concealed body spray

- WATER BAR cover plate 240 x 60 mm
- 1/2" WATER BAR connector

1 x affusion pipe with cover plate

- wall bracket
- 3/8" shower outlet
- 3/8" x 1/2" x 1250 mm shower hose with turning cone
- 1/2" wall elbow with back flow preventer
- Inherently safe from back flow

6 x eVALVE electronic valve for water temperature and volume adjustment

- Diagnostic capability
- Update capability
- supports thermal disinfection
- automatic scald protection

1 x electronic control elements (SMART TOOLS)

- 2 x twist-action control elements with electronic control for temperature and volume, each 60 x 60 mm
- 2 x display switch control elements with electronic control for BIG RAIN, WATER FALL with PEARLSTREAM, WATER BARS, affusion pipe, scenarios, each 60 x 60 mm
- preset temperature and volume
- Button lock for cleaning
- Service displays
- Pause function
- can be updated and networked

Comfort Shower^{ATT}

COMFORT SHOWER^{ATT} 35 321 970 90:

Product specification

- Concealed rough parts

4 x concealed rough parts for eVALVE

- Lead-free brass concealed body
- Min. recess depth for eVALVE (incl. xGRID installation track), 153 mm
- eVALVE controller - electronic valve activation

1 x concealed rough parts for electronic control elements (SMART TOOLS)

- 4 x concealed box for pre-wall installation mounting
- Min. recess depth for SMART TOOLS, 141 mm, hole diameter 56 mm

2 x xGRID installation tracks incl. connection kit

- 1 x installation track 510 x 135 x 12 mm
- 1 x installation track 1110 x 135 x 12 mm
- 1 x connection kit

Miscellaneous installation

- 2 x strainer, 3/4" female, DN 20
- 2 x stop valve, 3/4" female, DN 20

Additional planning information for the xGRID installation track can be found in the Symetrics Planning Guide at www.dornbracht-professional.com.

Dust covers and waterproof packing are included in every concealed rough parts delivery, ex works.

All rough parts with 25 m Ethernet cable

It is obligatory for technical planning, installation and initial commissioning to be accompanied by a certified system partner or by booking a Dornbracht service package

Detailed information on the service package can be found at www.dornbracht-professional.com.

Ceiling module

Exposed trim parts

BigRain

A – Housing

B – Mounting kit

C – Spray

D – Cover

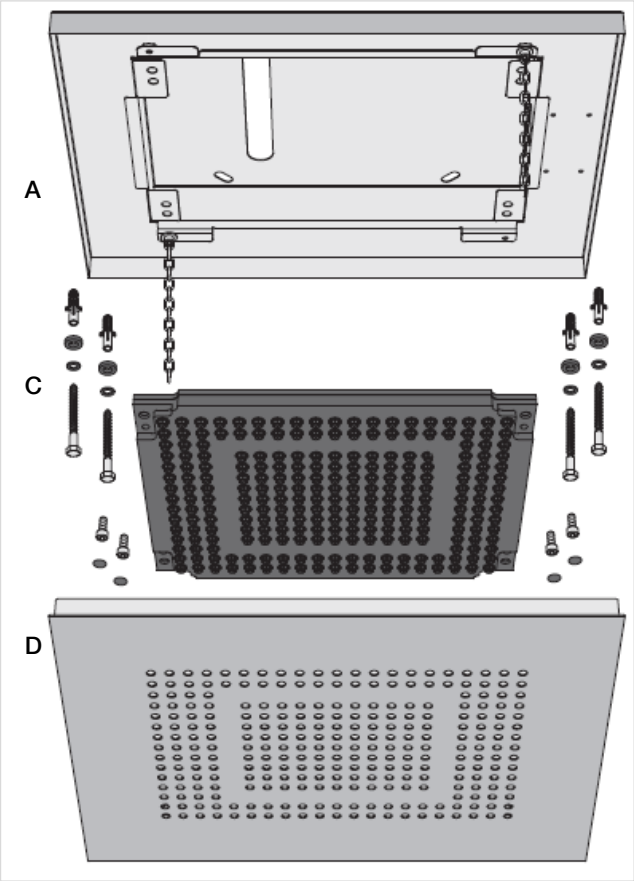

System Plate

E – xGRID track 510 mm

F – Motherboard box

G – 2 x box with eVALVE

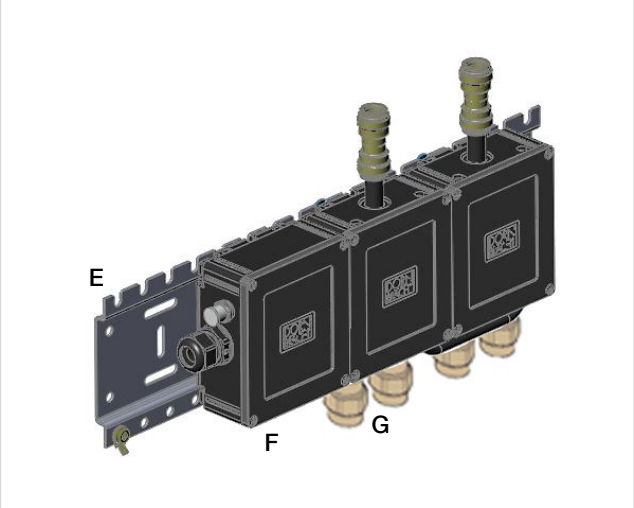

Wall components

WATER FALL with PEARLSTREAM, WATER BARS, affusion pipe

Concealed rough parts

A – xGRID track 990 mm
B – Connection kit for xGRID track
C – xGRID track 510 mm
D – 2 x concealed rough parts for eVALVE with controller
E – 2 x concealed rough parts for eVALVE with controller WATER BAR

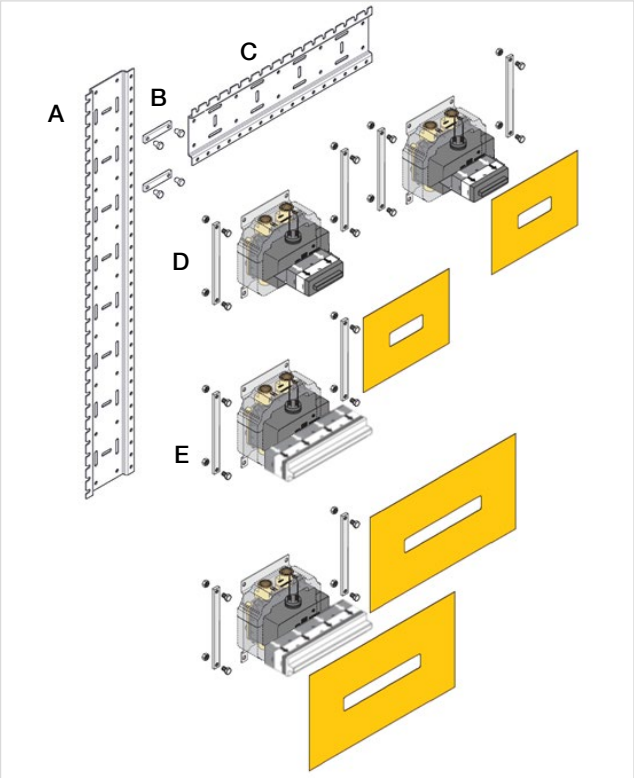

Exposed trim parts

F – WATER FALL with PEARLSTREAM
G – 2 x WATER BAR
H – Affusion pipe
I – 4 x eVALVE

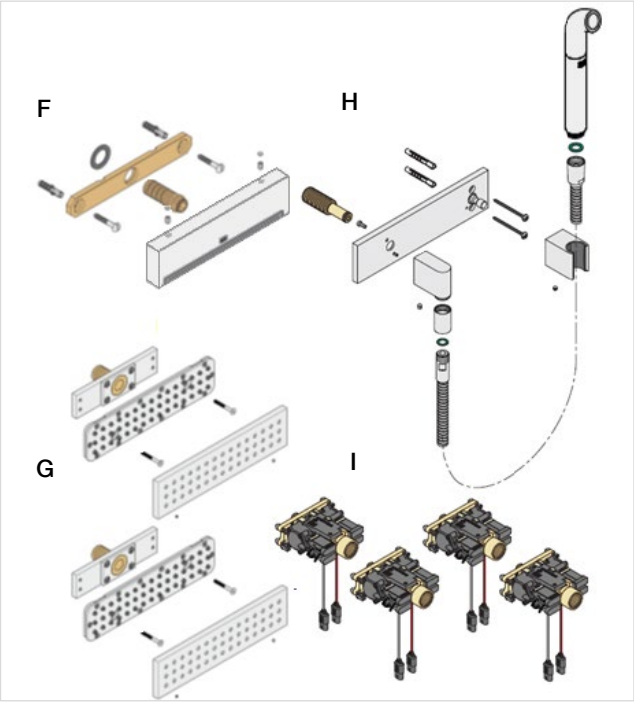

Control elements

Concealed rough parts

A – 4 x control element concealed rough parts

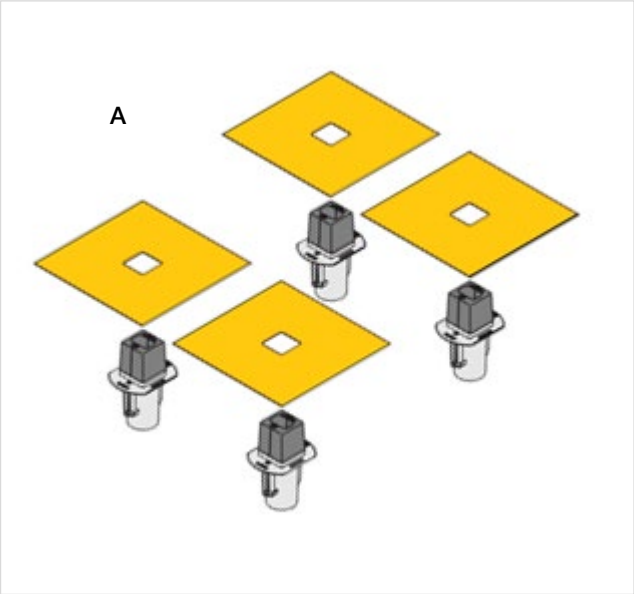

Exposed trim parts

B – 2 x display switch
C – 2 x twist controller

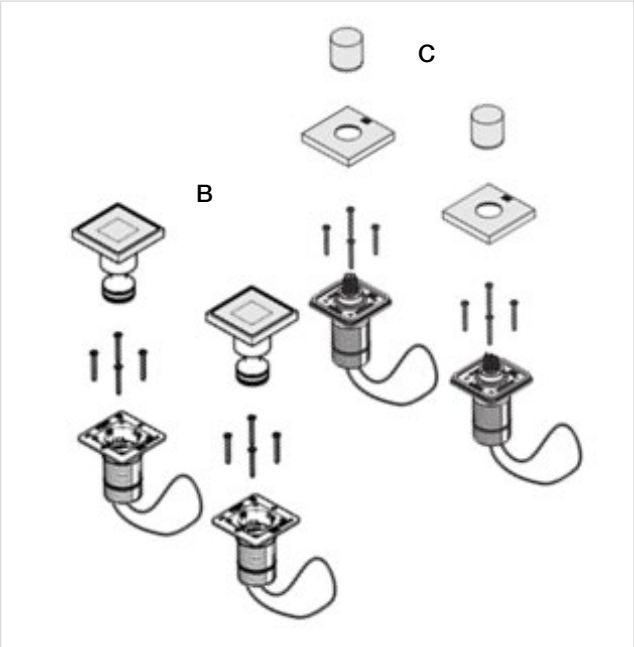

Miscellaneous

Internal plumbing

Concealed rough parts

A – 2 x stop valve (DN 20)
B – 2 x strainer (DN 20)
C – 2 x Y press and flush device
D – 1 x BIG RAIN connector set

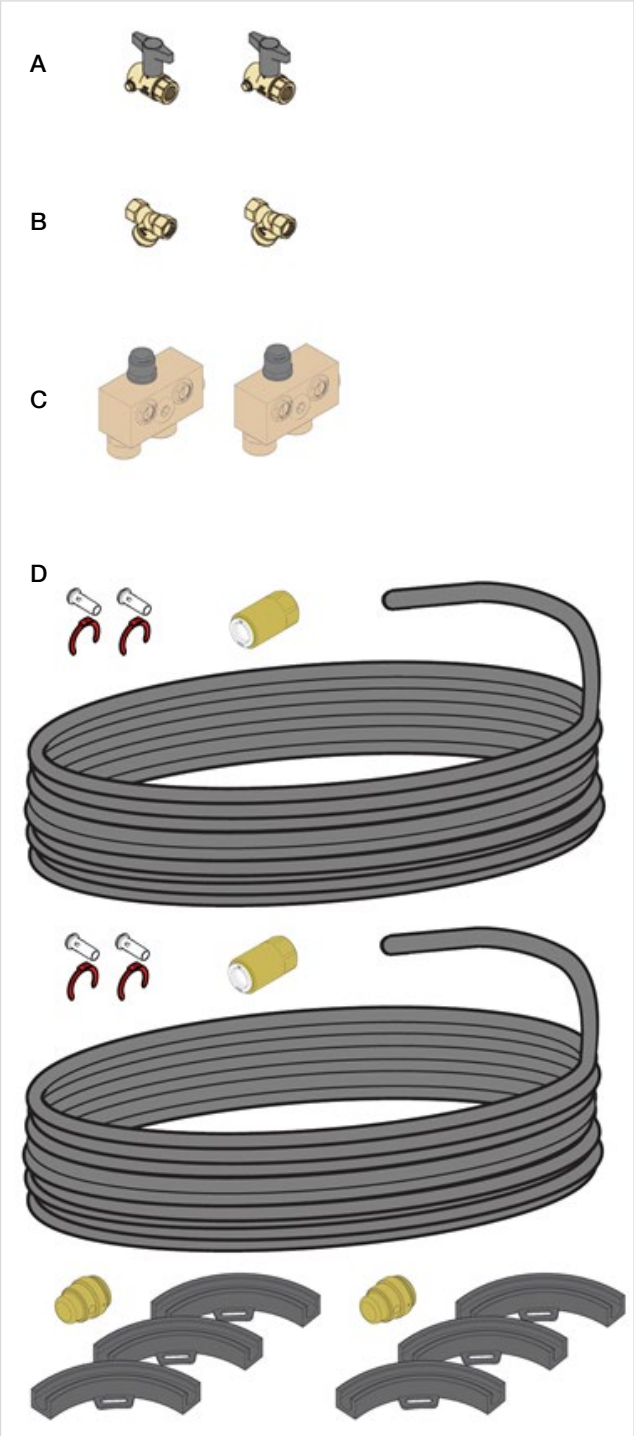

Miscellaneous

Electrical installation

Concealed rough parts

A – 1 x power supply 12 V DC, 5 A 15,000 mm
B – 1 x Ethernet (CAT 7) 25,000 mm
C – 5 x equipotential bonding 4 mm²/ AWG 11 15,000 mm
D – 2 x VBUS 5,000 mm
E – 2 x VBUS 2,900 mm
F – 4 x VBUS 1,500 mm

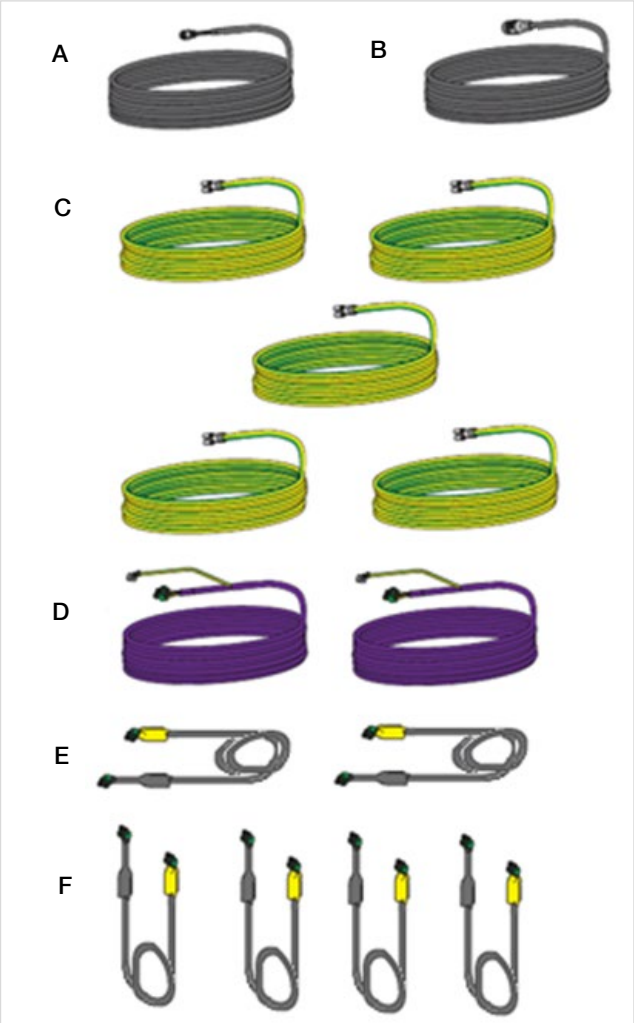

Exposed trim parts

G – 1 x DC filter 3 x 5 A
H – 1 x power supply unit 100 – 240 V AC / 12 V DC, 5 A

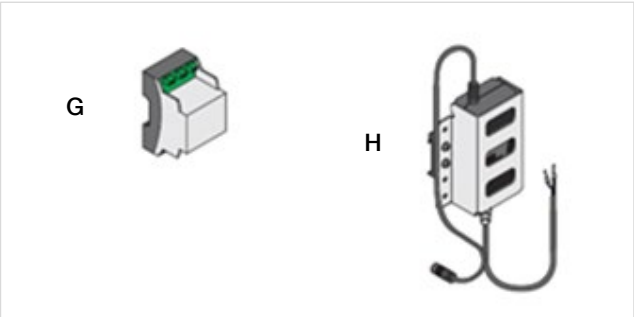

Optional miscellaneous

Leg Shower[ATT]

Exposed trim parts	41 331 979-FF
Concealed rough parts	35 331 970 90

See LEG SHOWER[ATT] planning guide.

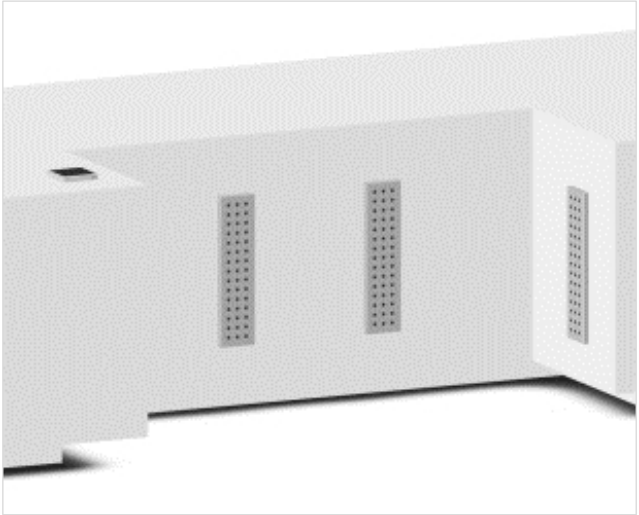

Tool kit (eVALVE mounting) 12 910 970 90

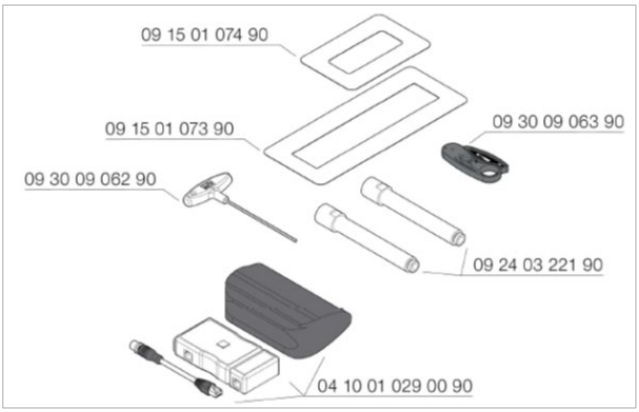

Technical data

General

Weight

– BIG RAIN	12 kg / 26.5 lbs (US)
– System Plate	5 kg / 11 lbs (US)

Recess depths

– BIG RAIN	min. 200 mm
– System Plate	min. 72 mm
– Concealed rough parts for eVALVE	min. 153 mm max. 176 mm
– Control elements	min. 141 mm
– Drilled hole diameter for concealed box	56 mm

Electrical data

Power supply

Fuse box power supply unit

– Input voltage	100 – 240 V AC
– Output voltage	12 V DC
– Input frequency	50 – 60 Hz
– Maximum power consumption	60 W
– Power consumption (operation)	50 W

System plate

– Supply voltage	12 V DC
– Protection rating	IP X4
– Equipotential bonding	4 mm² / AWG 11

Concealed rough parts for eVALVE (WATER FALL with PEARLSTREAM, WATER BARS, affusion pipe)

– Supply voltage	12 V DC
– Protection rating	IP 65
– Equipotential bonding	4 mm² / AWG 11

Control elements (display switch and twist controller)

– Supply voltage	12 V DC
– Protection rating	IP X4

Sanitary engineering data

The product is intrinsically safe in accordance with EN 1717.

The thermostat meets the requirements of EN 1111.

Scald protection (max. factory set temperature)
43 °C / 109 °F

Supply pipe dimensions

Hot/cold water	2 x DN 20 / NPS 3/4"

Drainage

– Drainage capacity / drain connection value [DU value]	1.8 l/s / 0.5 gps
– Recommended drain pipe size	DN 75 / NPS 3"

To select the ideal drain – taking the flow rate of the entire installation into account – it is necessary to assess demand on an individual basis.

Maximum flow rate at 300 kPa / 45 psi / 3 bar flow pressure

– Total	75.5 l/min / 19.9 gpm
– Balance (4:40 mins.)	73 l / 19.3 gal
– De-Stress (5:00 mins.)	84 l / 22.2 gal
– Energize (5:20 mins.)	92 l / 24.3 gal

Mark of conformity

CE

Ceiling module

BigRain
41 400 979 – FF

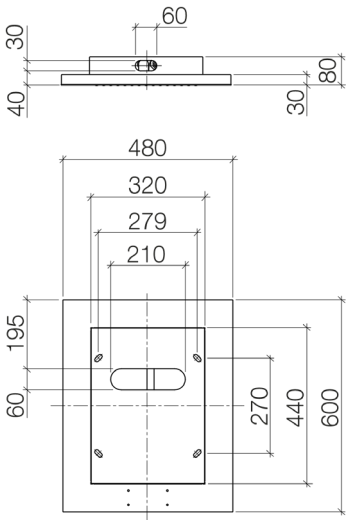

mm

System Plate

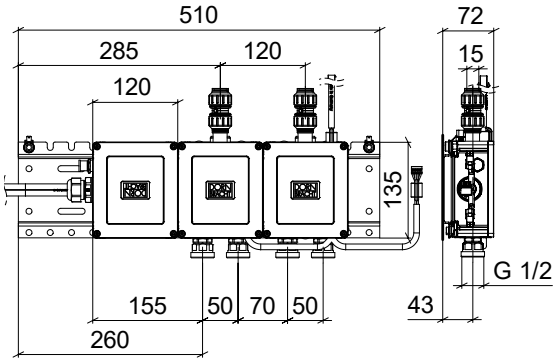

mm
Inch = mm / 25.4

WaterFall with Pearlstream

13 425 979 – FF

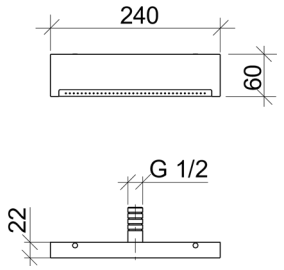

mm

35 315 970 90

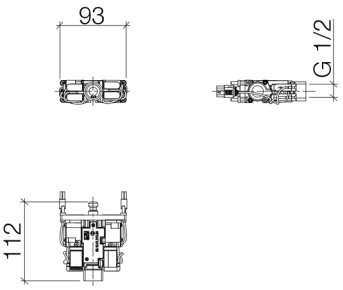

mm

35 212 970 90

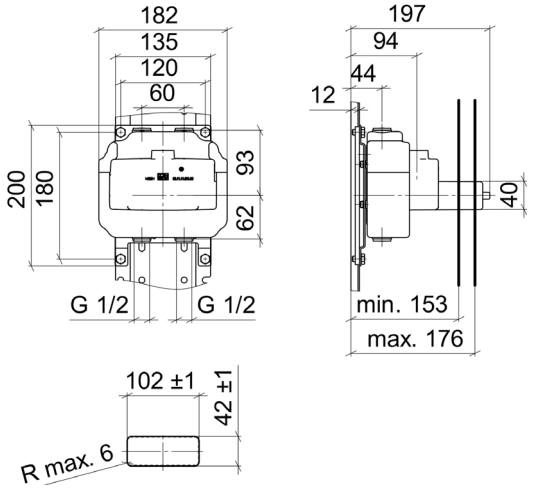

mm

Inch = mm / 25.4

WaterBar

36 517 979 – FF

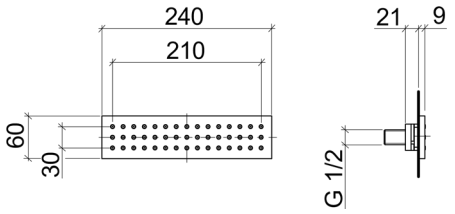

mm

35 315 970 90

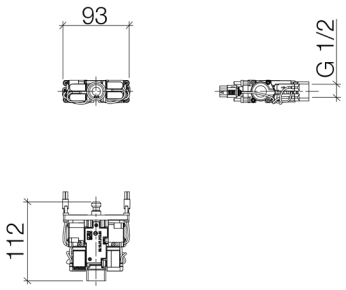

mm

35 213 970 90

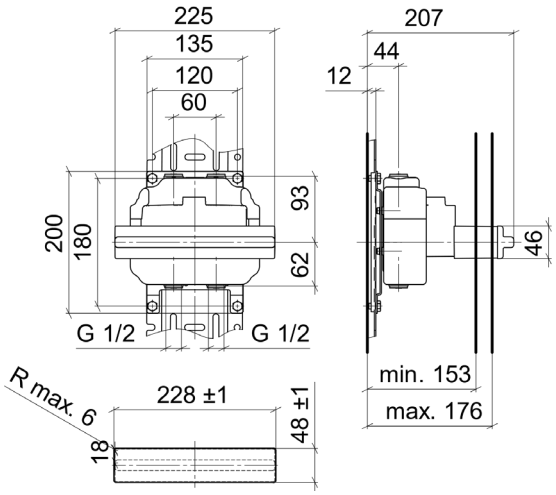

mm

Inch = mm / 25.4

Affusion pipe

27 838 979 – FF

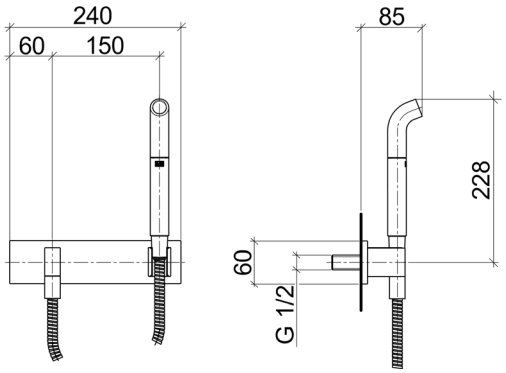

mm

35 315 970 90

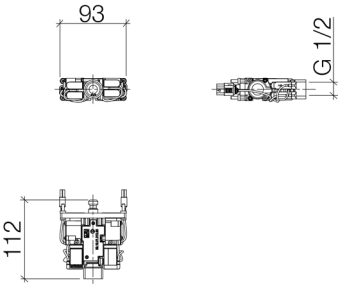

mm

35 212 970 90

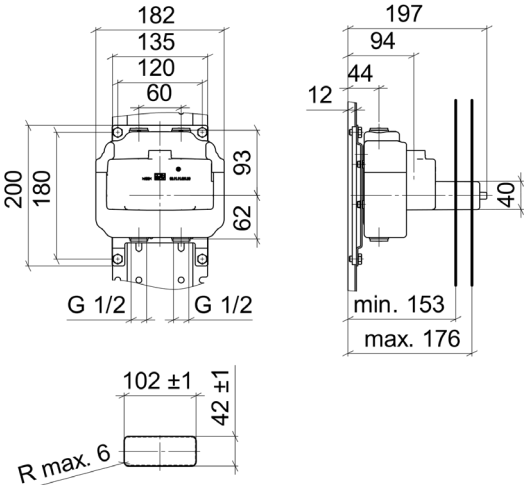

mm

Inch = mm / 25.4

Control elements

Smart Tools

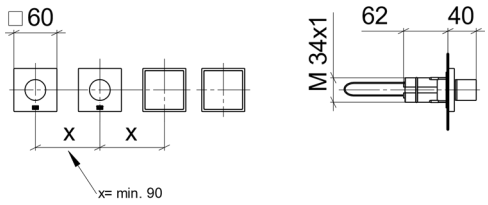

mm

Concealed rough parts for
SMART TOOLS

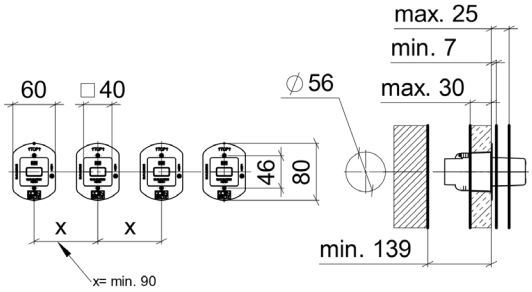

mm

Inch = mm / 25.4

Europe			
DE	Dornbracht Deutschland GmbH & Co.KG Hotline Technische Beratung E-Mail tservice@dornbracht.de Dornbracht International GmbH E-Mail tservice@dornbrachtgroup.com	Tel. Fax	+49 (0)2371 433 480 +49 (0)2371 433 175
BE	Dornbracht E-Mail mail@dornbrachtgroup.be	Tel. Fax	+32 (053) 81 02 78 (Vlaams) +32 (053) 81 02 79 (French) +32 (053) 80 47 41
CH	Dornbracht Schweiz AG E-Mail mail@dornbrachtgroup.ch	Tel. Fax	+41 (0) 62 787 20 30 +41 (0) 62 787 20 40
CZ, SK	Agentura Kramárová E-Mail mkramar@email.cz	Mob.	+420 724 207 528
ES, PT	Dornbracht España S.L. E-Mail mail@dornbrachtgroup.es	Tel. Fax	+34 93-272 391 0 +34 93-272 391 3
FR	Dornbracht France SARL E-Mail mail@dornbrachtgroup.fr	Tel. Fax	+33 (0) 1 40 21 10 70 +33 (0) 1 40 21 37 01
HU	Z-A Design Stúdió Kft. E-Mail dornbracht@zadesign.hu	Tel.	+36 70 77 50 954
IT	Dornbracht Italia s.r.l. E-Mail mail@dornbrachtgroup.it	Tel. Fax	+39 02 81 83 43 1 +39 02 81 83 43 215
LT, EE, LV	Arunas Jazukevicius E-Mail arunas.jazukevicius@burgbad-baltics.com	Tel. Fax	+370 686 303 13 +370 37 202767
NL	Dornbracht Nederland B.V. E-Mail mail@dornbrachtgroup.nl	Tel. Fax	+31 (0) 10 52 43 400 +31 (0) 10 52 43 410
PL	Honorata Broniowska E-Mail: biuro@dornbrachtgroup.pl	Tel. Mob.	+48 (0) 95-728 261 7 +48 (0) 602471319
RO, BG, MD	Reallize Consult SRL E-Mail dornbracht@reallize.ro	Tel. Mob. Fax	+40 21 528 03 91 +40 722 654 654 +40 21 528 03 90
RU, BY, KZ	OSA GmbH & Co. KG E-Mail osa@o-s-a.de	Tel.	+7 (499) 241 8259
DK, SE, NO, FI, IS	Dornbracht Nordic A/S E-Mail mail@dornbrachtgroup.dk	Tel.	+45 50 84 54 00
SRB, BIH, MNE, MK, HR	DOZEN Stars d.o.o. E-Mail nenadkop@yahoo.com E-Mail zoja.jovicevic@yahoo.com	Tel. Fax	+381 (11) 6555120, 6555119, 6555118 +381 (11) 22 83 966
AM, AZ, GE, GR, KG, TJ, TR, TM, UZ, Northern Cyprus	Dornbracht Turkey/Central Asia E-Mail mail@dornbrachtgroup.com.tr	Tel. Fax	+90 (0) 212 284 9495 +90 (0) 212 284 0023
UA	Lesia Khelemendyk E-Mail office@helena.com.ua	Tel. Fax	+38 (0) 44-244 7682 +38 (0) 44-244 7682
UK, IE	Dornbracht UK Ltd. E-Mail mail@dornbrachtgroup.co.uk	Tel. Fax	+44 (0) 2476-717 129 +44 (0) 2476-718 907
Central Europe			
AT	Dornbracht Austria GmbH E-Mail mail@dornbrachtgroup.at	Tel. Fax	+43 (0) 2236-677360 +43 (0) 2236-677360 20

Americas			
US, CA, Central America, South America	Dornbracht Americas Inc. E-Mail dornbrachtam@dornbrachtgroup.com E-Mail technicalservice@dornbracht.com	Tel. Fax	+1 800-774-1181 +1 770-564-3599 +1 800-899-8527
Mexico	German Concepts S.A. de C.V. E-Mail rmijares@germanconcepts.com.mx Dornbracht Americas Inc.	Tel. Fax Tel. Fax	+52 (55) 53 43 84 50 +52 (55) 53 43 90 97 +1 800-774-1181 +1 770-564-3599 +1 800-899-8527
Asia Pacific			
HK/MAC, JP, KR, TW, NZ, AUS	Dornbracht Asia Pacific Ltd. E-Mail mail@dornbrachtgroup.hk	Tel. Fax	+852 2505 6254 +852 2505 9722
SG, ML, ID, PH, TH, VN	Dornbracht South East Asia Pte. Ltd. E-Mail mail@dornbrachtgroup.sg	Tel.	+65 6823 6813
CN	Dornbracht (Shanghai) Commercial Ltd. E-Mail mail@dornbrachtgroup.com.cn	Tel. Fax	+86 (0) 21-6360 6930 +86 (0) 21-5150 6775 +86 (0) 21-6361 4155
IN	Dornbracht India Private Ltd. E-Mail mail@dornbrachtgroup.in	Tel. Fax	+91 22 26853900 +91 22 26853912 +91 22 26853900
Middle East			
AE, BH, EG, IQ, IR, JO, KW, LB, OM, PK, QA, SA, SY, YE	Dornbracht International GmbH - Rep. Office E-Mail DornbrachtME@dornbrachtgroup.com	Tel. Fax	+971 4 380 6611 +971 4 380 6606
LB	Naji Kanafani & Fils E-Mail info@kanafani.com.lb	Tel. Mob. Fax	+961 1 307 400 +961 3 251 630 +961 1 307 403
South Africa			
ZA	Siobhan Thomas E-Mail Siobhan@dornbracht.co.za	Tel.	+27 215 117 888
West Africa			
BJ, CI, CM, GH, GM, GA, SN	Mr. Amine Moghrabi E-Mail amine_mak@idm.net.lb E-Mail amine_mak@hotmail.com	Mob.	+225 05 55 38 38 +961 3 29 02 49

Aloys F. Dornbracht GmbH & Co. KG Armaturenfabrik
Köbbingser Mühle 6, D-58640 Iserlohn
Tel. +49(0)2371 433-0, Fax +49(0)2371 433-232
mail@dornbracht.de, dornbracht.com

Dornbracht Group
Premium Solutions for Interior Architecture

Version 1.2 - 03.2019 Models, programmes and technical modifications as well as errors are excepted.