WATERWORKS
STUDIO

STYLES: DBTB18, DBTB24

*FINISH/COLOR MUST BE SPECIFIED WHEN ORDERING
++SUPPLIED AS A PAIR

DOCUMENT: SPDB19_REV01
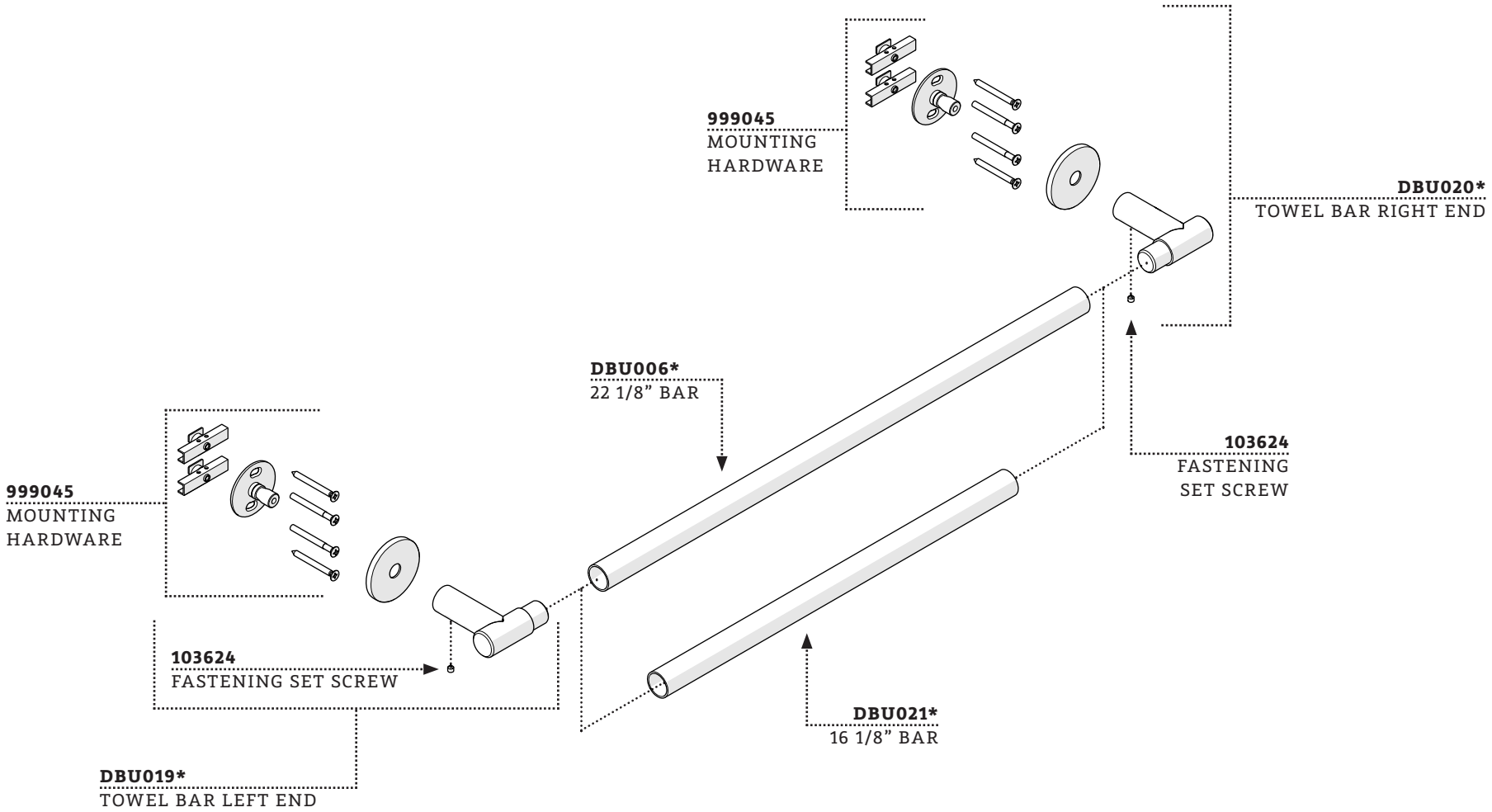
SERVICE PARTS