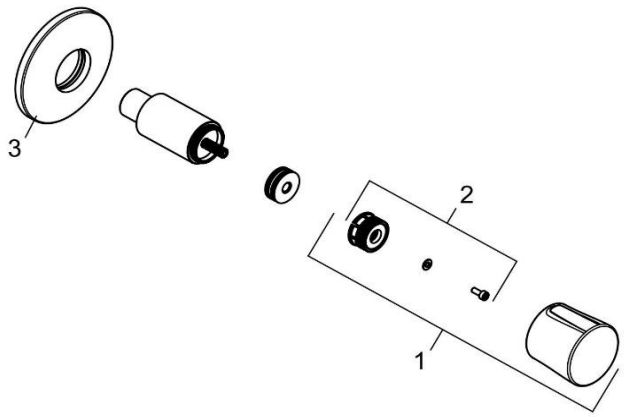

528468775		Drei-Wege-Umstellung	three-way diverter
1	7309239-00	GRIFF BALANCE	HANDLE BALANCE
2	7472300-00	RASTBUCHSE	HOLD BUSHING
3	7326039-00	UP - ROSETTE	ESCUTCHEON, CONCEALED