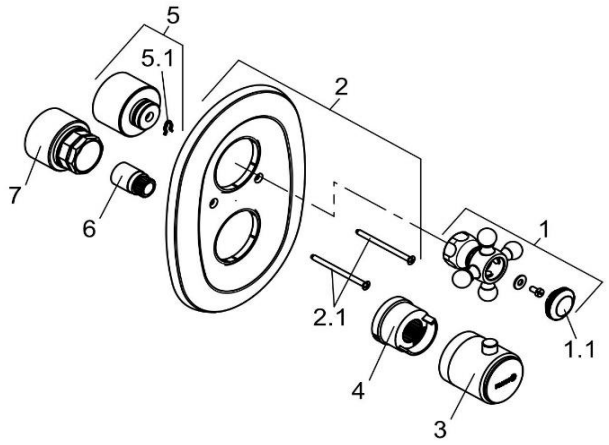

517204520		Unterputz-Thermostatarmatur	concealed thermostatic mixer
1	7533645-00	GRIFF KLUDI 1926	HANDLE KLUDI 1926
1.1	7502445-00	ABDECKKAPPE	COVER CAP
2	7526845-00	UP - ROSETTE	ESCUTCHEON, CONCEALED
2.1	92211005-00	SCHRAUBE	SCREW
3	7510745-00	THERMOSTATGRIFF	HANDLE FOR THERMOSTAT
4	93030111A-00	JUSTIERBUCHSE	SLEEVE FOR ADJUSTMENT
5	7573245-00	BUCHSE FÜR ABSPERRUNG	SHUTTING OFF
6	92025437-00	VERLÄNGERUNG	EXTENSION
7	92025345-00	KOPFSTÜCKVERLÄNGERUNG	EXTENSION FOR HEAD PIECE