Telescopic colonial concealed

Telescopic colonial concealed
30025/ID-NKSP

TECHNICAL INFORMATION

Traditional telescopic and turning shower column with adjustable mounting with articulated shower holder, built-in holder and diverter. Ø270 non-liming inspectable and serviceable traditional shower headin brass/stainless steel. Brass inspectable and serviceable traditional one jet shower. Brass double spiral flexible hose cm 150. BRUSHED NICKEL

Flow rate:
? Doccia o soffione?

FEATURES

Rain jet

Non-liming

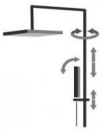
adjustable telescopic shower column

PICTURE

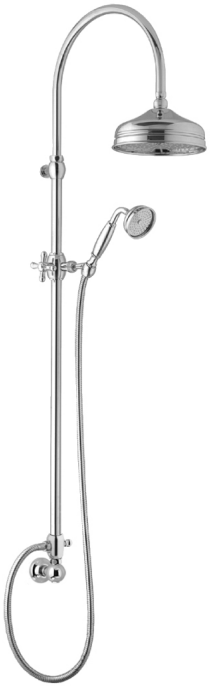

TECHNICAL DRAWING

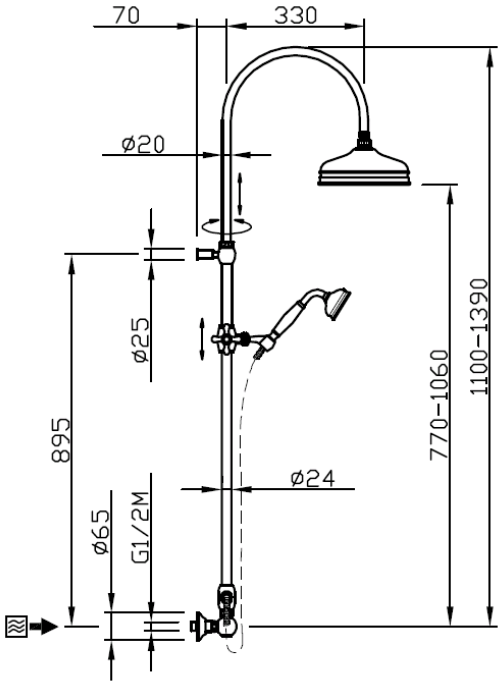

SPARE PARTS

FINISHINGS