E-11459-LM57B

HARLEY Series

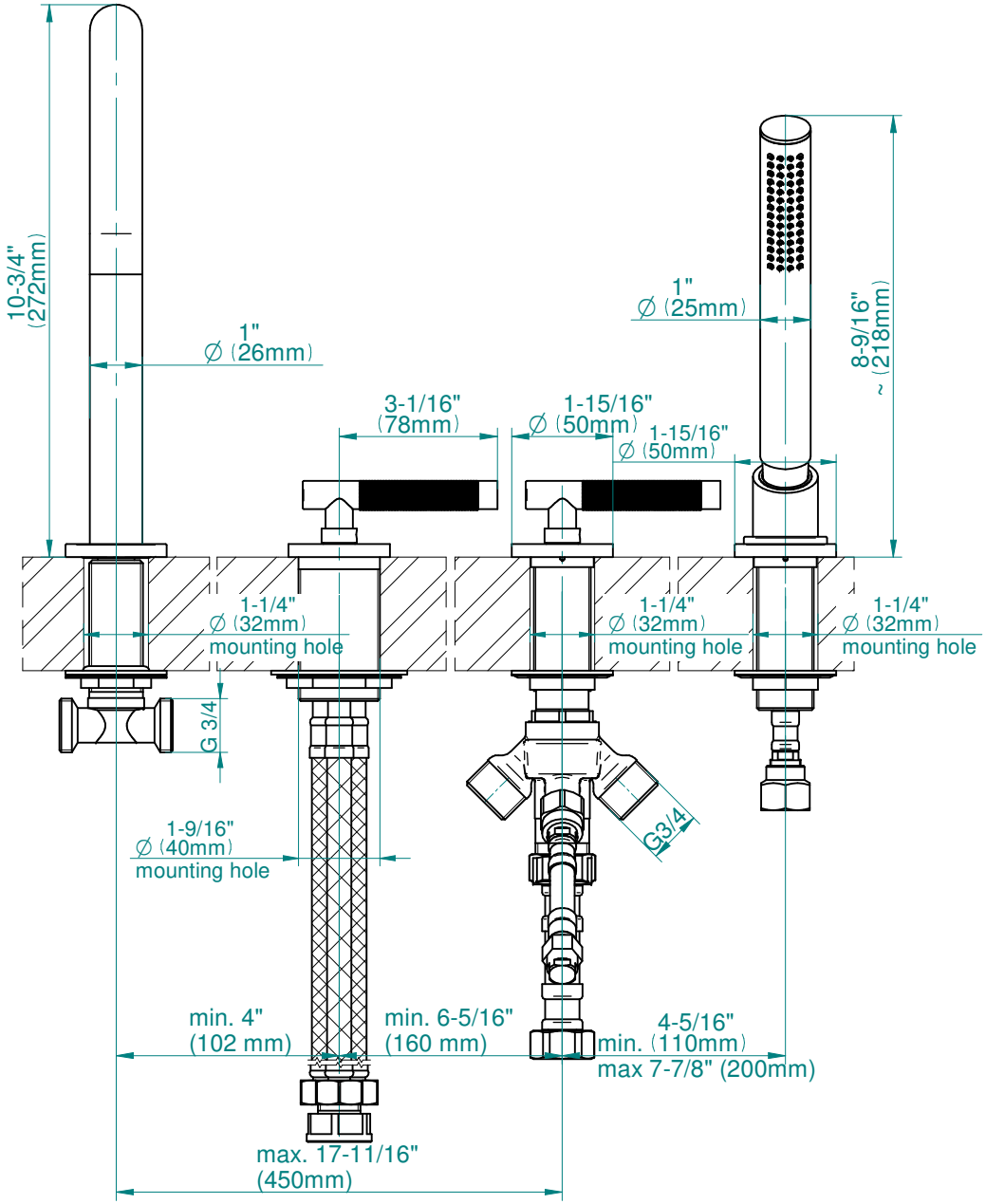

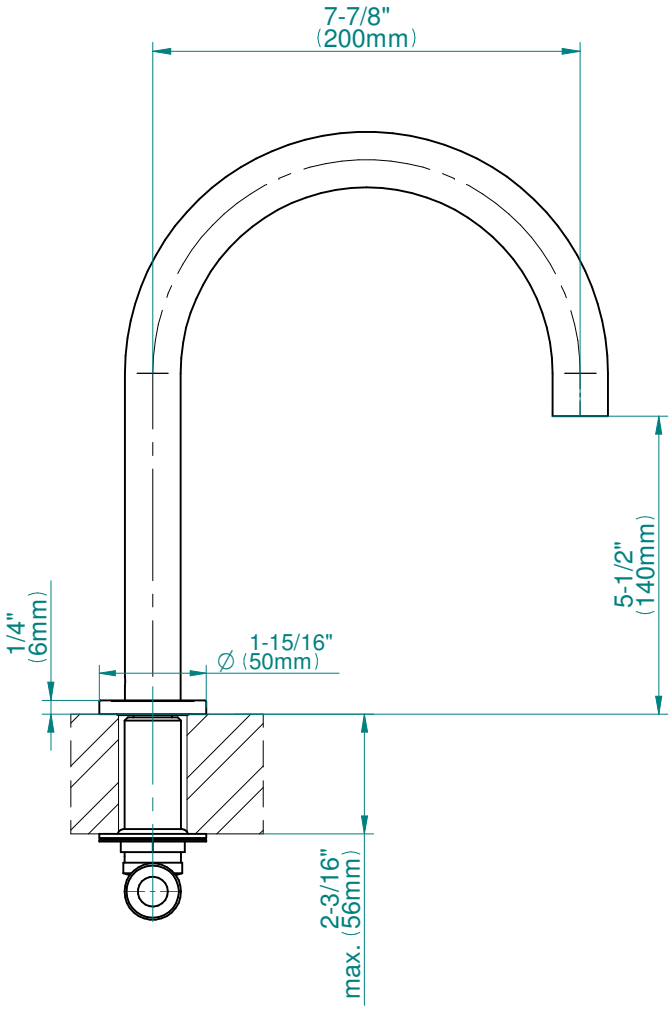

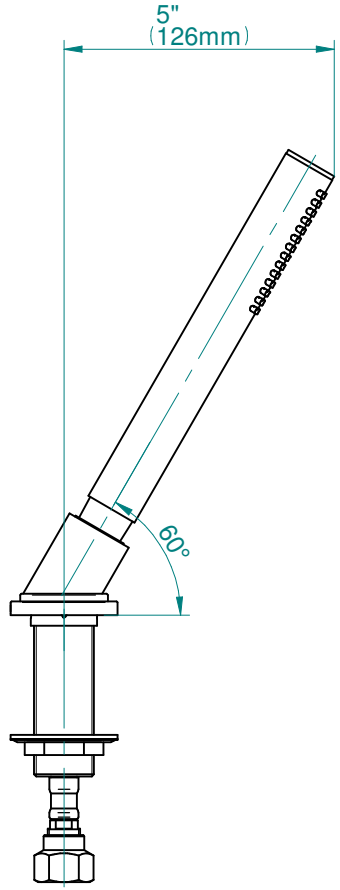

GRAFF®
CUTTING EDGE DESIGN