Art. 3772

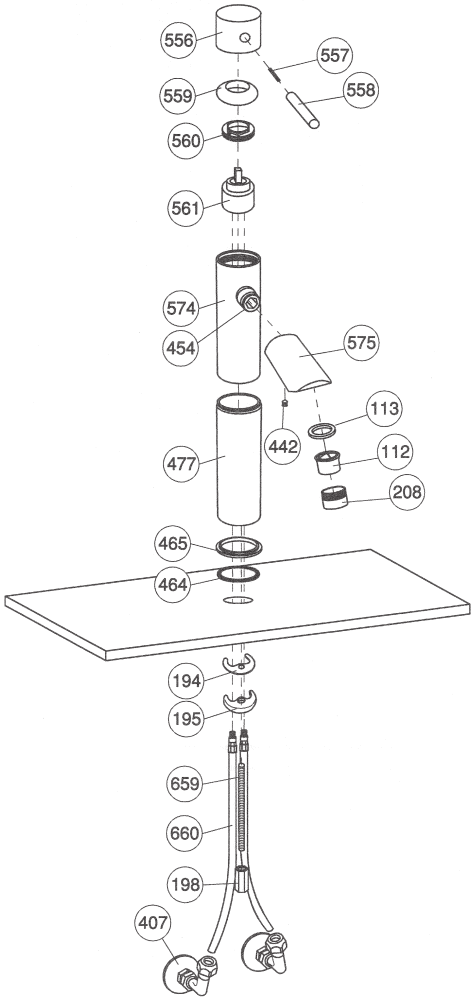

Pos.	Descrizione	Description	Cod.
112	Aeratore 24x1	Aerator 24x1	C 7086
113	Guarnizione per aeratore 24x1	Washer for aerator 24x1	C 7086
194	Guarnizione gomma sagomata	Shaped rubber washer	C 7585.10
195	Ghiera a mezza-luna	Half-moon ring nut	C 7282
198	Dado 8MA prolungato (ES.13)	Lengthen nut 8 MA (ES.13)	C 7260/7
208	Porta aeratore maschio (M24x1)	Maler aerator holder (24x1)	C 7083
407	Niples curvo	Curved niples	C 7810
442	Grano M 5x5	Dowel M 5x5	C 7552
454	O-ring Ø 14x1.78	O-ring Ø 14x1.78	C 7586.55
464	O-ring Ø 39.34x2.62	O-ring Ø 39.34x2.62	C 7586.78
465	Anello base per monocomando “Pumori”	Basin disc for single lever mixer “Pumori”	C 3602/3
477	Canotto prolunga lavabo “Pumori”	Piper extension single lever mixer “Pumoi”	C 3672/1
556	Corpo leva monocomando Olympus	Olympus body steam lever	C 7694/1
557	Grano M5 x 16	Dowel M5x16	C 1480/6
558	Stelo leva monocomando Olympus	Olympus steam lever	C 7694/2
559	Coprighiera monocomando Olympus	Olympus cover ring nut	C 3702/4
560	Ghiera ferma cartuccia monocomando Olympus	Stop cartridge ring nut Olympus	C 3702/3
561	Cartuccia monocomando Olympus	Olympus series cartridge	3009 D 35
574	Corpo monocomando lavabo alto T.C. Olympus	Single lever basin and bidet mixer higt body T.C.Olympus	C 3772/1
575	Corpo canna monocomando lavabo alto Olympus	Higt body of basin mixer spout Olympus	C 3772/2
659	Perno filettato M8x310	Threaded pivot M8x310	C 7555/310
660	Tubo rame con raccordo	Copper tube with joint	C 7493/47