Art. 3972

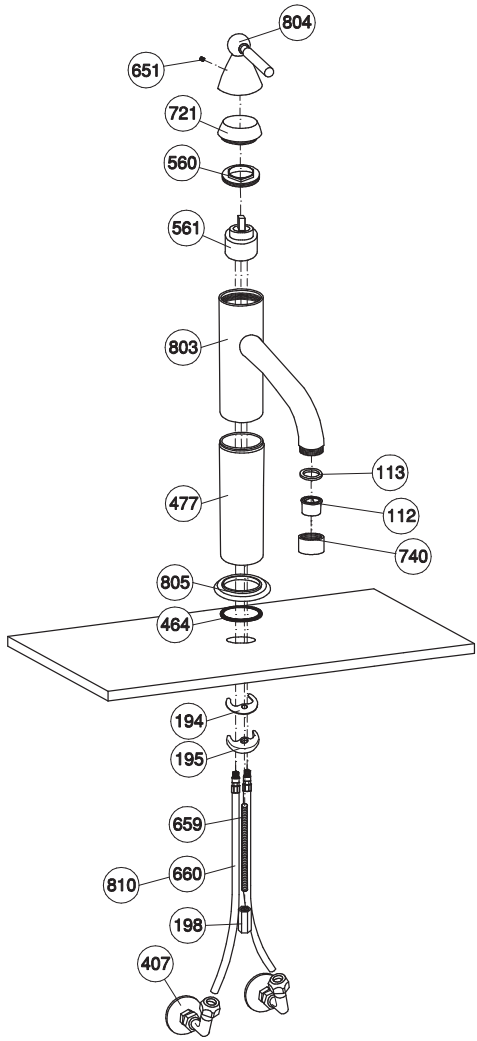

Pos.	Descrizione	Description	Cod.
112	Aeratore 24x1	Aerator 24x1	C 7086
113	Guarnizione per aeratore 24x1	Washer for aerator 24x1	C 7086
194	Guarnizione gomma sagomata	Shaped rubber washer	C 7585.10
195	Ghiera a mezza-luna	Half-moon ring nut	C 7282
198	Dado 8MA prolungato (ES.13)	Lengthen nut 8 MA (ES.13)	C 7260.7
407	Niples curvo	Curved niples	C 7810
464	O-ring Ø39.34x2.62	O-ring Ø39.34x2.62	C 7586.78
477	Canotto prolunga lavabo “Pumori”	Pipe extension single lever mixer “Pumori”	C 3672/1
560	Ghiera ferma cartuccia monocomando Olympus	Stop cartridge ring nut Olympus	C 3702/3
561	Cartuccia monocomando Olympus	Olympus series cartridge	3009 D 35
651	Grano M5x4	Dowel M5x4	C 7635/2
659	Perno filettato M8x310	Threaded pivot M8x310	C 7555/310
660	Tubo rame con raccordo	Copper tube with joint	C 7493/47
721	Coprighiera monocomando Vincent	Vincent cover ring nut	C 3002/3
740	Aeratore	Aerator	C 2208/3
803	Corpo monocomando lavabo alto T.C.	Single lever basin mixer higt body T.C.	C 3772 SL
804	Leva monocomando Torre	Torre lever handle	C 7657
805	Anello base per monocomando Torre	Basin disc for single lever mixer Torre	C 3902/1
810	Flex inox cm. 55 10x1 3/8 C	Flex inox cm. 55 10x1 3/8 C	C 7089.55E