Art. 3806

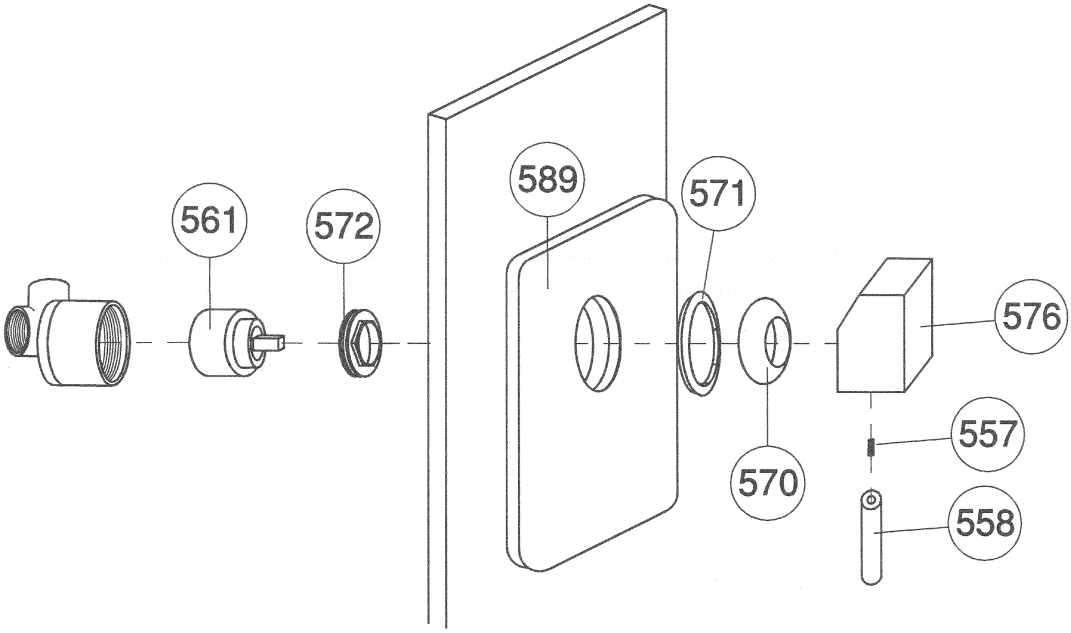

Pos.	Descrizione	Description	Cod.
557	Grano M5 x 16	Dowel M5x16	C 1480/6
558	Stelo leva monocomando Olympus	Olympus steam lever	C 7694/2
561	Cartuccia monocomando Olympus	Olympus series cartridge	3009 D 35
570	Coprighiera ABS doccia incasso Olympus	Olympus cover ring nut	C 3706/5CR
571	Anello per piastra doccia incasso Olympus	Built-in single lever washer	C 3706/6
572	Ghiera fermacartuccia per doccia incasso Olympus	Stop cartridge ring nut Olympus	C 3706/4
576	Corpo leva monocomando Antelao	Antelao body steam lever	C 7696/1
589	Piastra monocomando incasso Antelao	Plate for built-in single lever mixer Antelao	C 3806/1