Colonial

Colonial
00-2000-CR

TECHNICAL INFORMATION

Traditional style thermostatic shower column in brass. Non-liming inspectable and serviceable colonial shower head, Ø220, in brass/stainless steel. One jet colonial hand shower in brass, non-liming, inspectable and serviceablewith curved brass elbow. Double spiral flexible hose in brass, 150mm. Special details: fixing screws covered by aesthetic caps and a harmonious design linking the hexagonal shape of the nut to the conical shape of the column. CHROME

Flow rate:
x rubinetto

FEATURES

Rain jet

Non-liming

PICTURE

TECHNICAL DRAWING

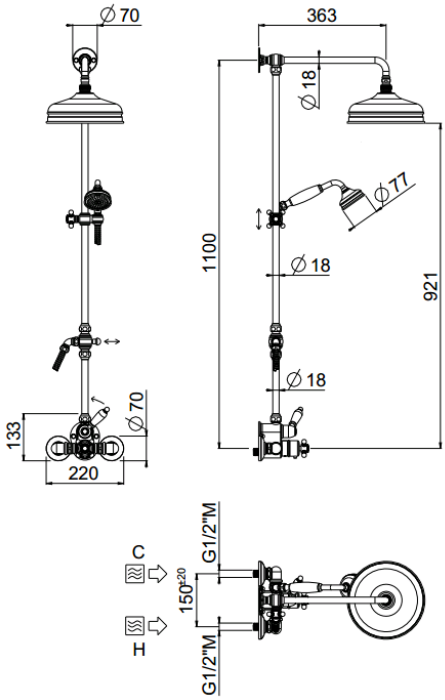

SPARE PARTS

0RIC007

0RIC059
Termostatica
Thermostatic
T°

FINISHINGS