E-11350-LM56

Vintage Series

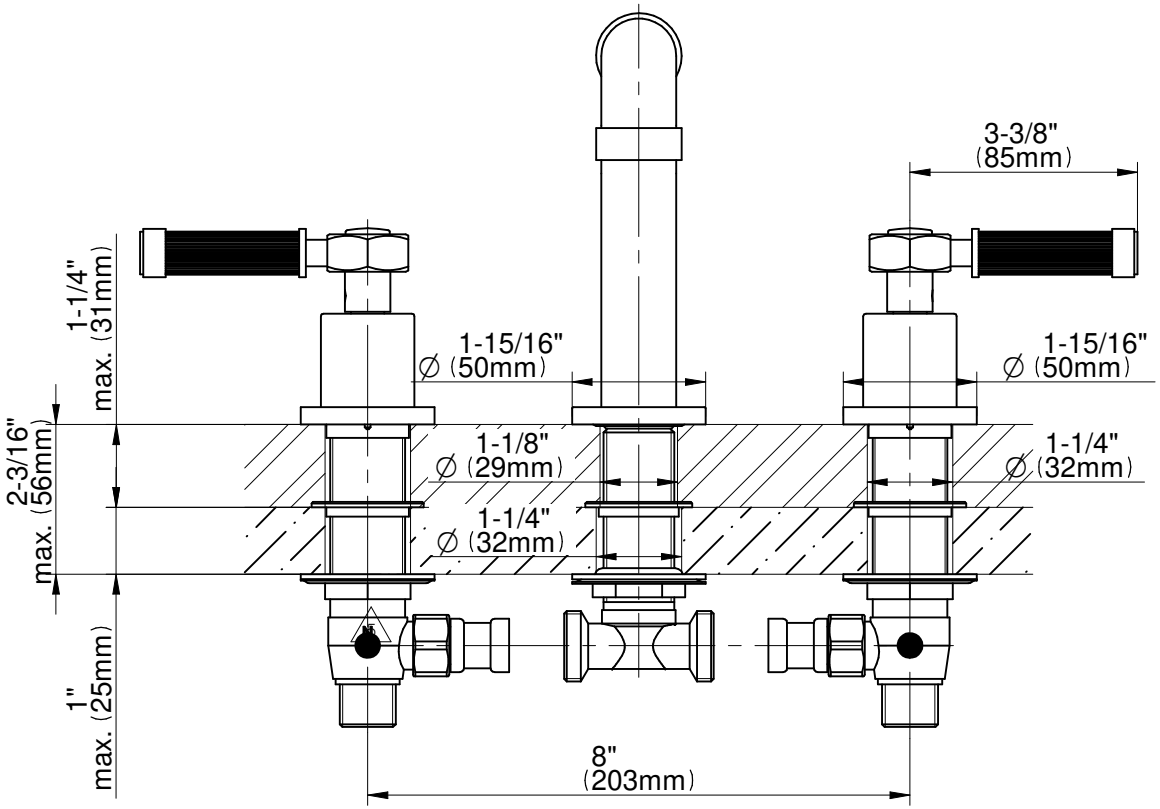

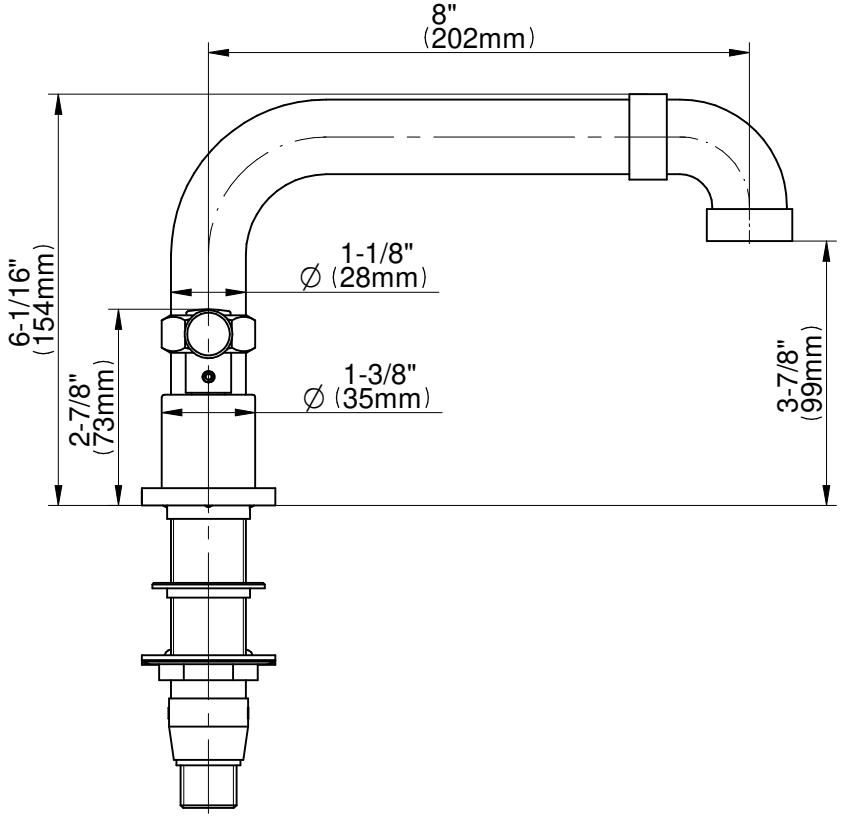

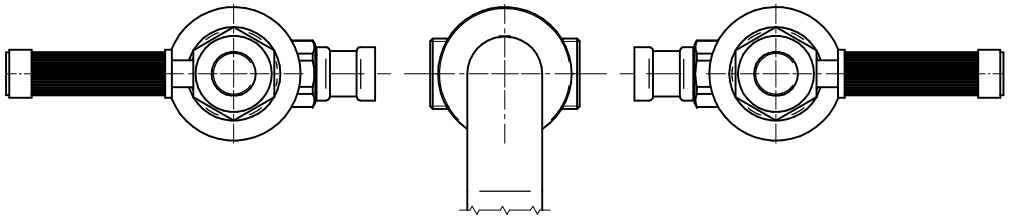

GRAFF®
CUTTING EDGE DESIGN