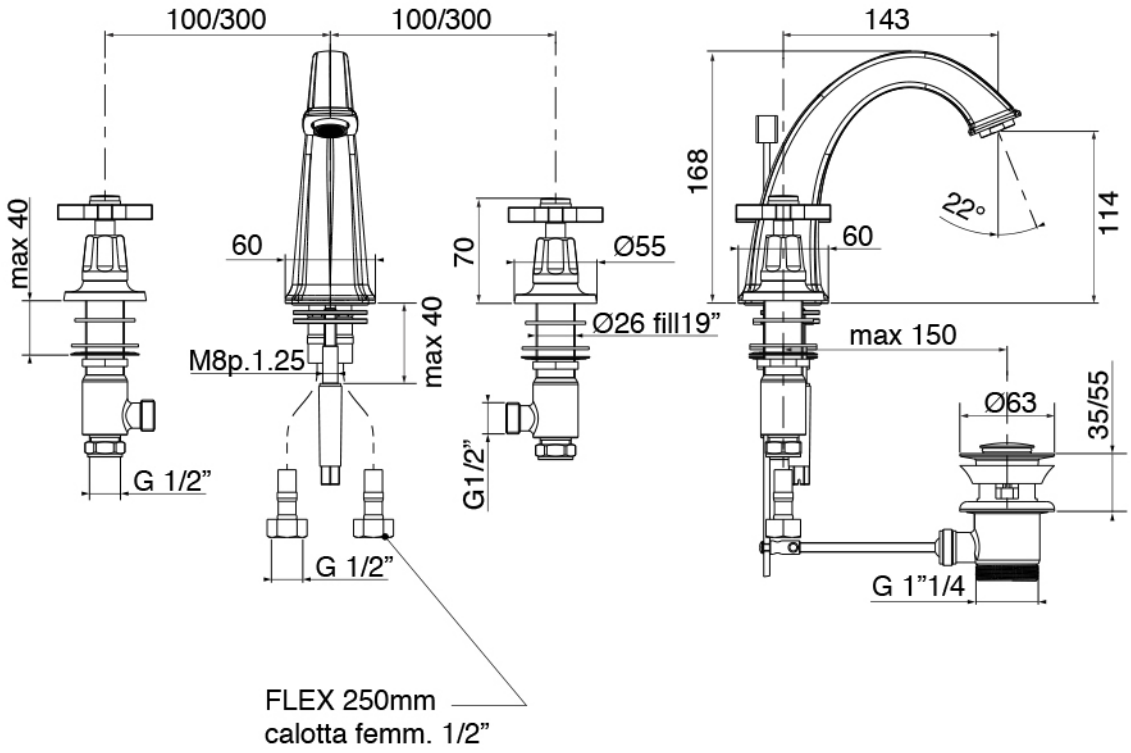

CHOPIN WHITE Collection	
Code	Description
	Chopin White basin mixer 3 tap holes
12000-C	Chrome
12001-I/N/O/OR	Incalux, Nickel, Dark Gold, Rose Gold
12001-B/ND/R	Bronze, Dark Nickel, Copper

GENTRY HOME

Verona - Italy
tel. +39 045 8006917
fax. +39 045 8020111
gentry-home.com