SET IL BAGNO ALESSI ONE

Bathtub
freestanding version
24597.2

TECHNICAL DATA

Order no.	24597.2
Certified to	EN 14516 (EN 198), EN 232, EN 12764
Dimensions	1830 x 870 mm
Depth	460 mm
Use capacity	240 litre (total: 310 litre)
Specification	Oval bathtub made of solid surface material, cast Freestanding version, with not removable panel With overflow slot at long side With pre-installed lifting system to move the bathtub aside in case of maintenance, with floor fixation With pre-installed overflow With click-clack drain valve, chrome Charge 000 – without whirl system
Special specification	Bathtub without whirl system, with sensor control: Charge 615 – bathtub with LED light Bathtub with whirl system, with sensor control: Charge 605 – Whirlpool with air massage Charge 625 – Whirlpool with air massage and LED light
Weight	Charge 000 – 131,5 kg Charge 605 – 136,5 kg Charge 615 – 132,5 kg Charge 625 – 137,5 kg
Accessories excl.	Gel Pillow, self adhesive, order no. 29468.0
Mounting acc. incl.	pre-installed overflow and click-clack drain valve chrome Drilling template, order no. 29497.3 Flex-pipe 1m, order no. 29443.9
Installation requirement	Cut-out in the floor is needed for housing the siphon.
Colours	000 – White

TECHNICAL DRAWINGS / S 1 : 40

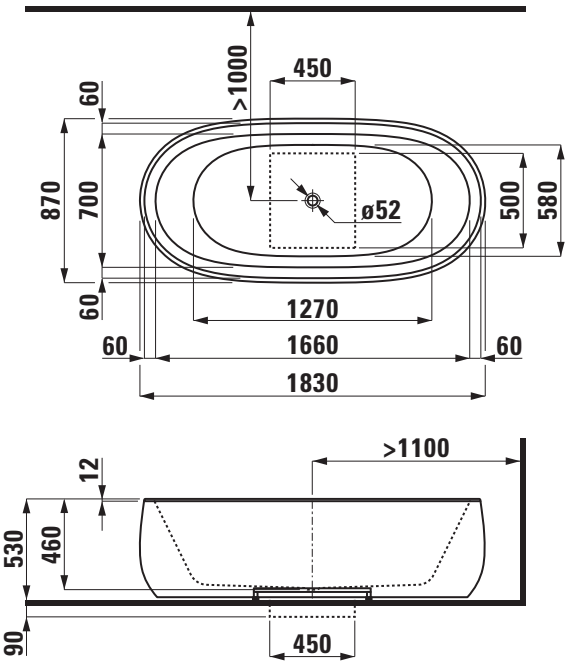

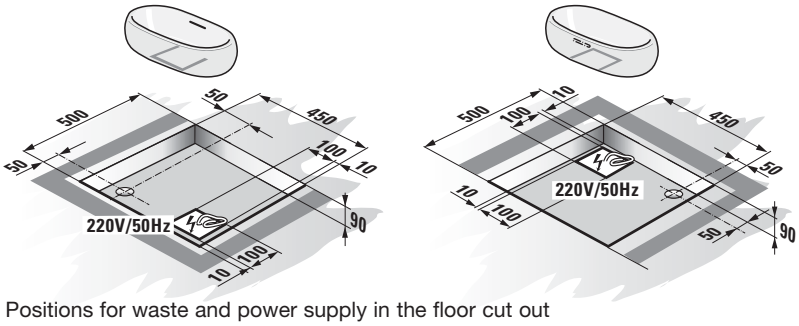

Positions for waste and power supply in the floor cut out

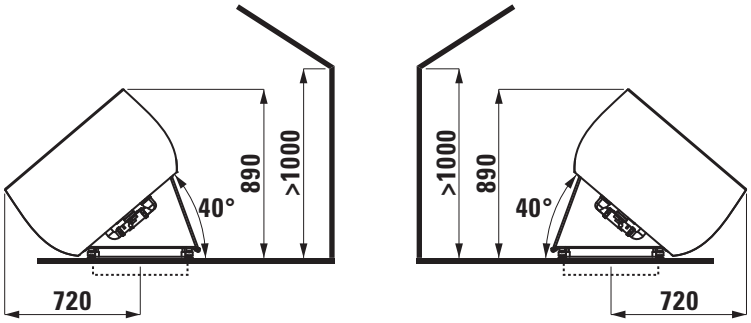

LAUFEN

Z 211004