5148300

Termostat -trim Series

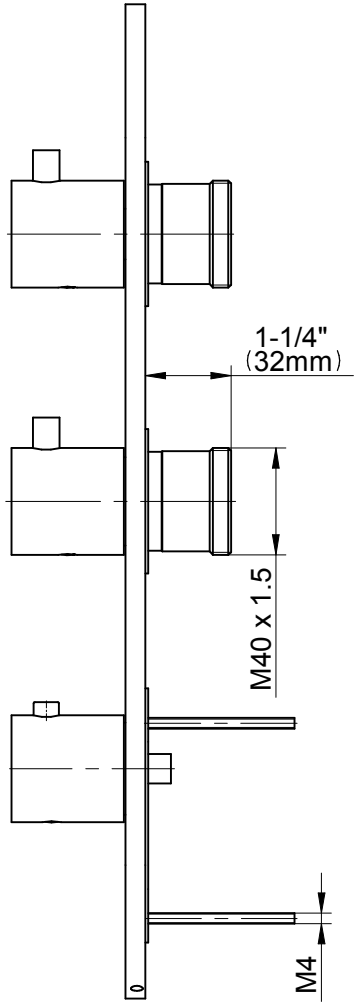

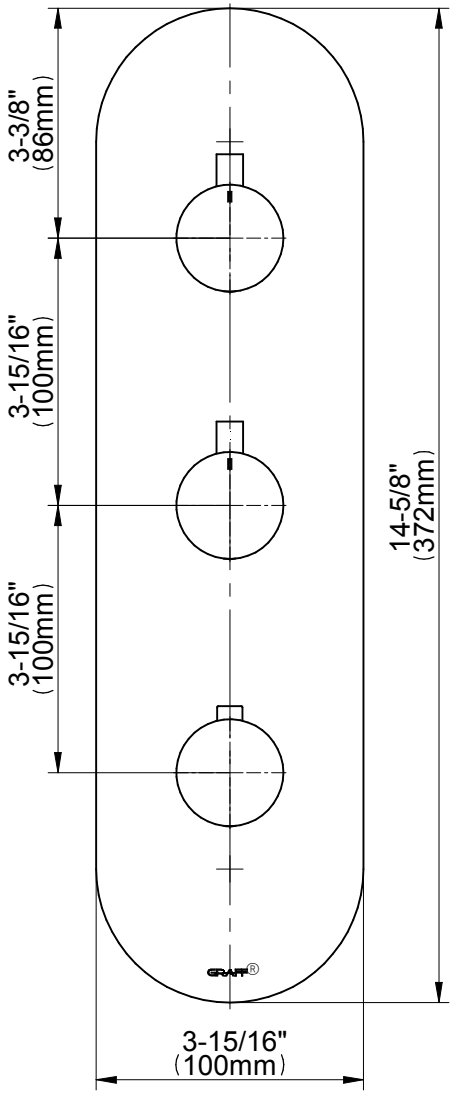

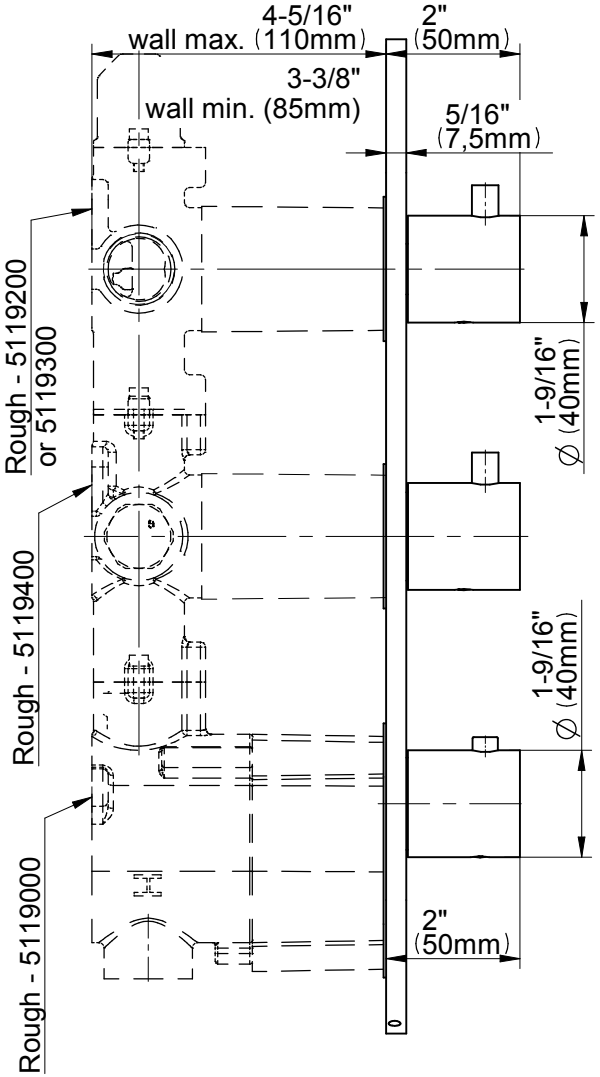

GRAFF®
CUTTING EDGE DESIGN