DATA SHEET (Auxiliary) 20190429

ALLIANCE - Wall hung storage unit 1 niche - 600 / 800 / 1000

E-1
STANDARD
120

Materials

•Fabrication de module:

- Carbon-TX: panneau MDF de 12,5 mm. Enduit avec design exclusif PVC Salgar "Carbon-TX".

* All panels used in the manufacture of this unit are classed as E-1 grade with low level of formaldehyde content..

• Arrière (épaisseur = 3mm):

- Carbon-TX: panneau MDF de 3 mm. Enduit avec design exclusif PVC Salgar "Carbon-TX".

Metal Fitting

• Hangers: high resistance wall brackets with two independent regulations. Certificate according to DIN 68840 (equivalent to 260kg of final load per set).

Packaging Dimensions and weight (mm).

	600	800	1000
Lenght mm.	628	828	1028
Depth mm.		486	
Height mm.		311	
Net weight Kg.	7	8	9,5
Gross weight Kg	9,7	10,5	12,2

Combinable avec les séries Spirit et Monterrey.

Dimensional sketch

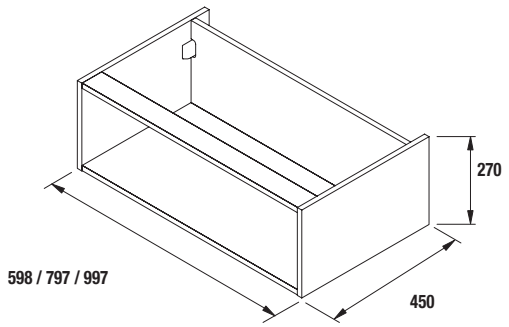

Finishes

Carbón-TX