Rigoletto telescopic with spout

Rigoletto telescopic with spout single shower column
00-0870-CR

TECHNICAL INFORMATION

Bridge telescopic shower column including exposed thermostatic mixer with diverter and swinging spout, turning bar with adjustable mounting. Without shower and hand shower. Smooth double anti-torsion PVC flexible hose, cm 150. CHROME

Flow rate:
x rubinetto

FEATURES

Tub spout

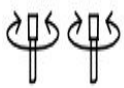
double anti-torsion

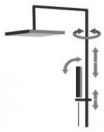
adjustable telescopic shower column

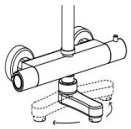
Rigoletto adjustable spout

PICTURE

TECHNICAL DRAWING

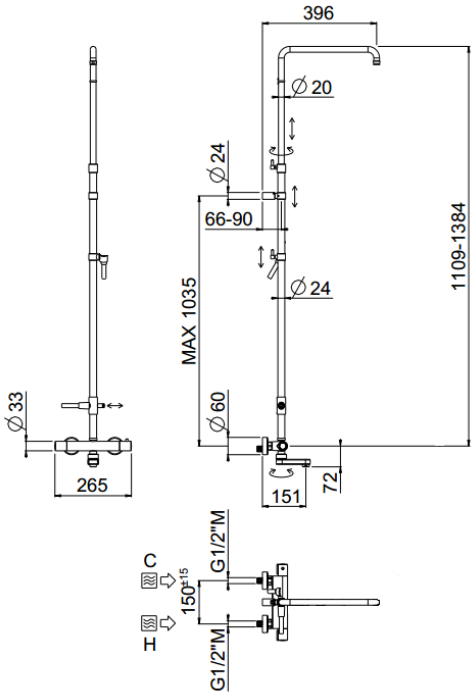

SPARE PARTS

0RIC031
T°

0RIC032
2 vie / ways

FINISHINGS