TECHNICAL SPECIFICATION

ex.t

SATURDAY 9

EXF70SA

DESIGN BY — Ex.t

DESCRIPTION — wall-mounted basin

useful info : fixing kit included

MODULE DIMENSION — 70 x 48 cm

weight : 19,8 Kg

MATERIAL — ceramic

COLORS

- ○ White
- ● Black

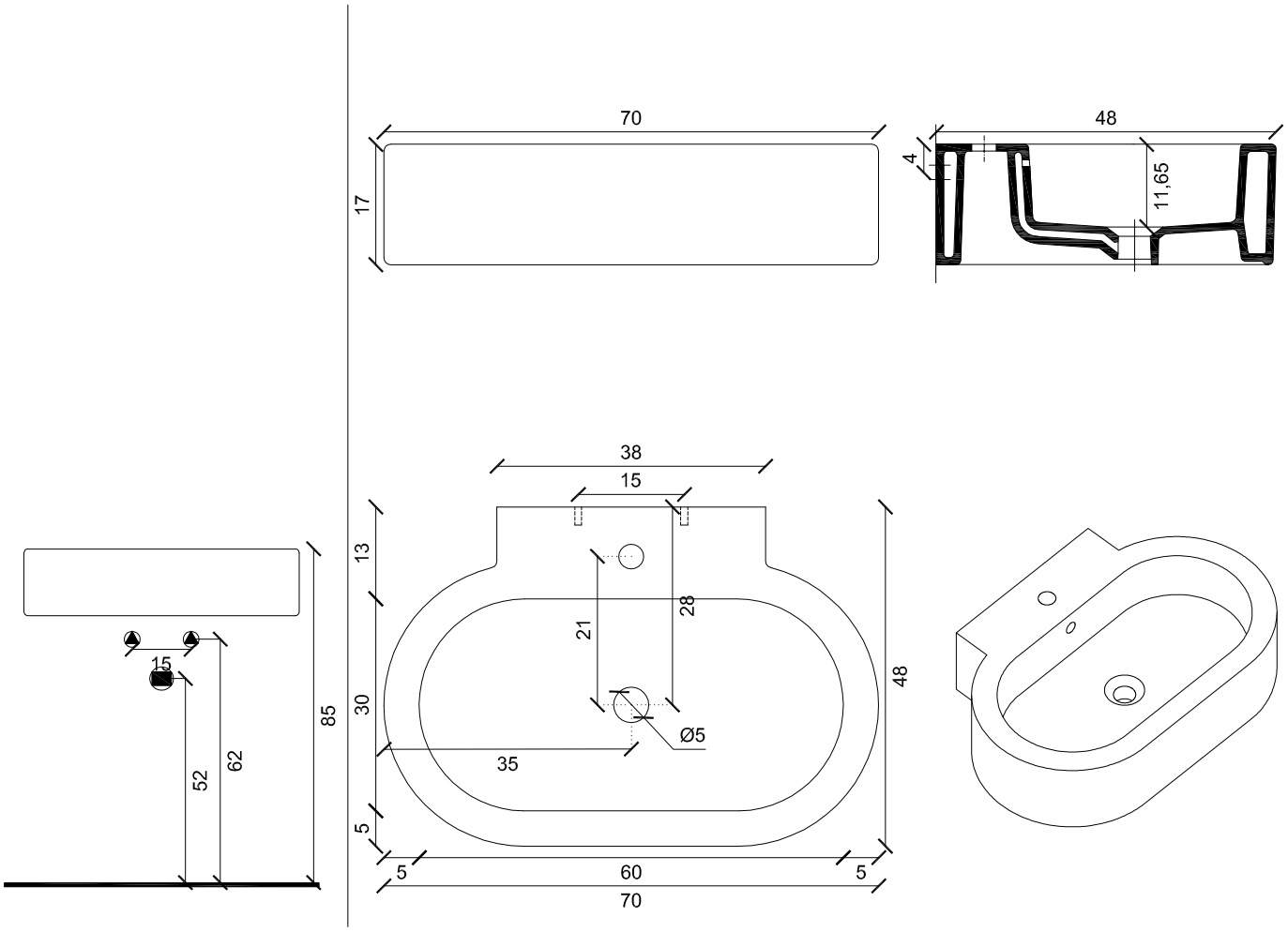

We accept no responsibility for any inaccuractes in this data sheet