# Rigoletto Square telescopic with spout

Rigoletto Square telescopic with spout single shower column
**00-0970Q-CR**

## TECHNICAL INFORMATION

Telescopic shower column including exposed thermostatic mixer with brass handles, diverter and swinging spout, turning bar with adjustable mounting. Without shower and shower head. Smooth double anti-torsion PVC flexible hose, cm 150. CHROME

**Flow rate:**
x rubinetto

## FEATURES

Tub spout

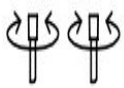
double anti-torsion

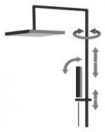
adjustable telescopic shower column

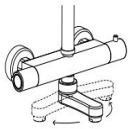
Rigoletto adjustable spout

## PICTURE

## TECHNICAL DRAWING

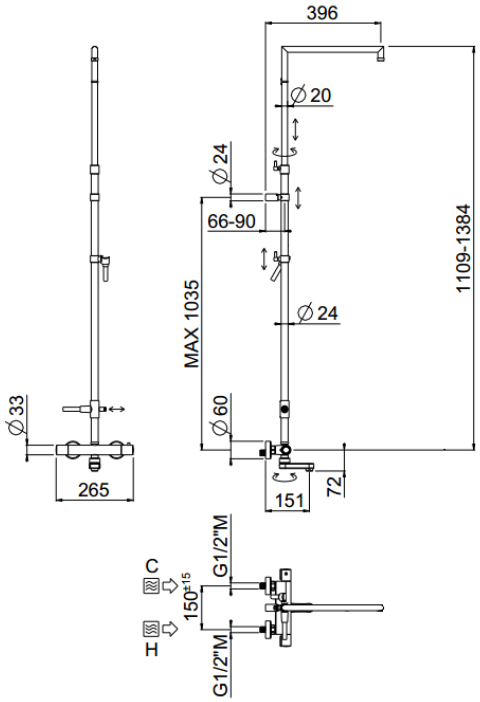


## SPARE PARTS

0RIC031
T°

0RIC032
2 vie / ways

## FINISHINGS