CRICR161

CRISTINA
RUBINETTERIE

Complete 3 hole concealed shower mixer with sliding bar, LONG LIFE flexible hose, skewed anti-lime hand shower and anti-lime checkable overhead shower

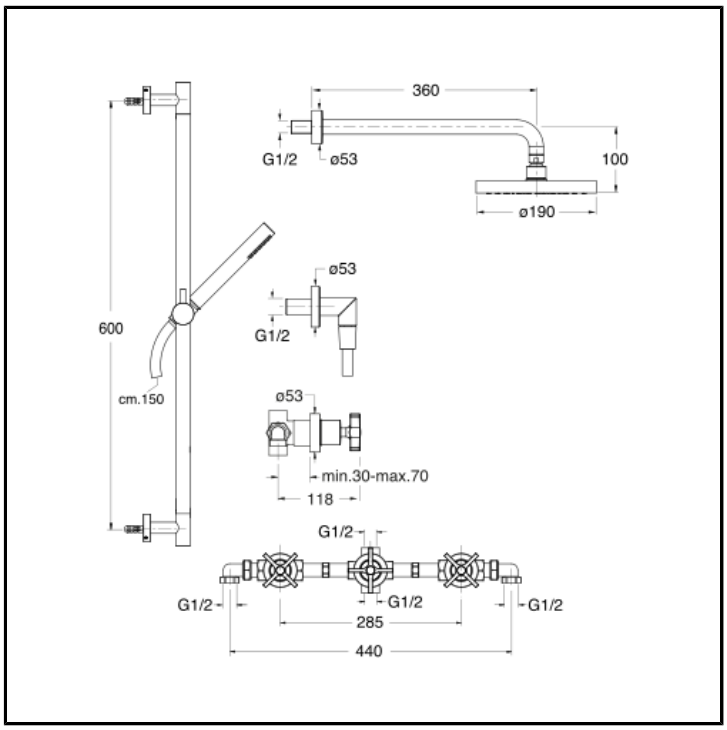

FINITURE

- Chrome
- Brushed black chrome
- Brushed metallic
- Black matt
- Yellow gold oro
- PVD polished rose gold
- PVD brushed rose gold

INSTALLATION

- Wall

TYPOLOGY

-

ENVIRONMENT

- Bathroom