CRIDE320

CRISTINA
RUBINETTERIE

Bidet mixer with 1"1/4 Up&Down waste

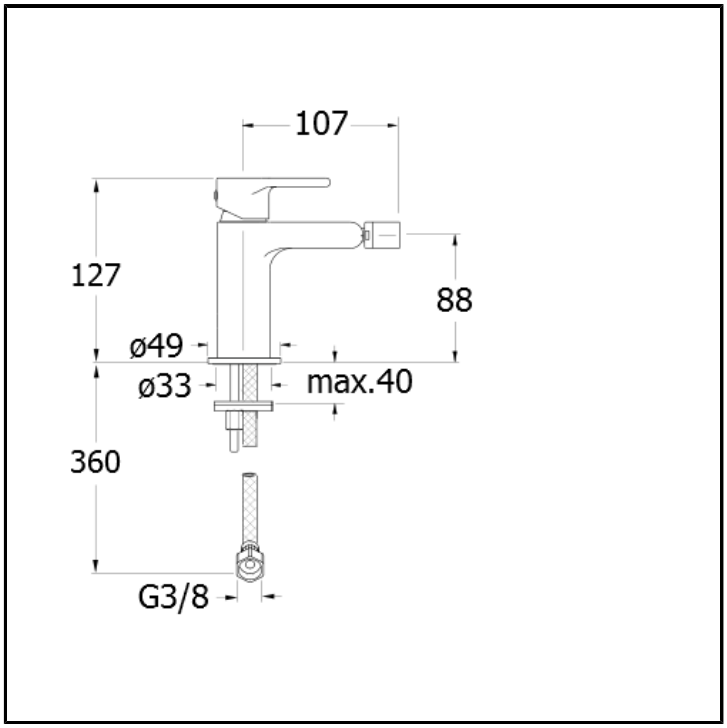

FINITURE

- White matt
- Chrome
- Black matt

FEATURES FROM TECHNOLOGIES

-
-
-
-

COMMAND

- Monocontrol

INSTALLATION

- Top

TYPOLOGY

-

ENVIRONMENT

- Bathroom