Deck Tub Set w/ Hand Shower

PHYLRICH®
Defining Luxury Since 1959

230-48

▪ PRODUCT FEATURES

- Style: Contemporary
- Collection: Basic II
- Temperature Controlled By Handles
- Knurled Handles
-
-

▪ TECHNICAL DETAILS

ADA Compliance: Yes
Deck Thickness Maximum: 2"
Deck Thickness Minimum: 1/8"
Fitting Hole Diameter: 1 1/8"
Number of Holes: Three Hole
Number of Handles: Two
Handle Spread Maximum: 12"
Handle Spread Minimum: 8"
Handle Turn Angle: Quarter Turn
Spout Reach: 9"
Spout Height: 10 1/2"
Inlet Connection Type: Male 3/4" NPT
Installation Type: Deck Mounted
Primary Material: Brass
Valve Material: Ceramic
Shower Flow Restriction: Full Flow
Hand Shower Flow Restriction: 1.8 GPM
Water Pressure Maximum: 85 PSI
Water Pressure Minimum: 20 PSI
Water Pressure Recommended: 60 PSI

▪ PRODUCT DIMENSIONS

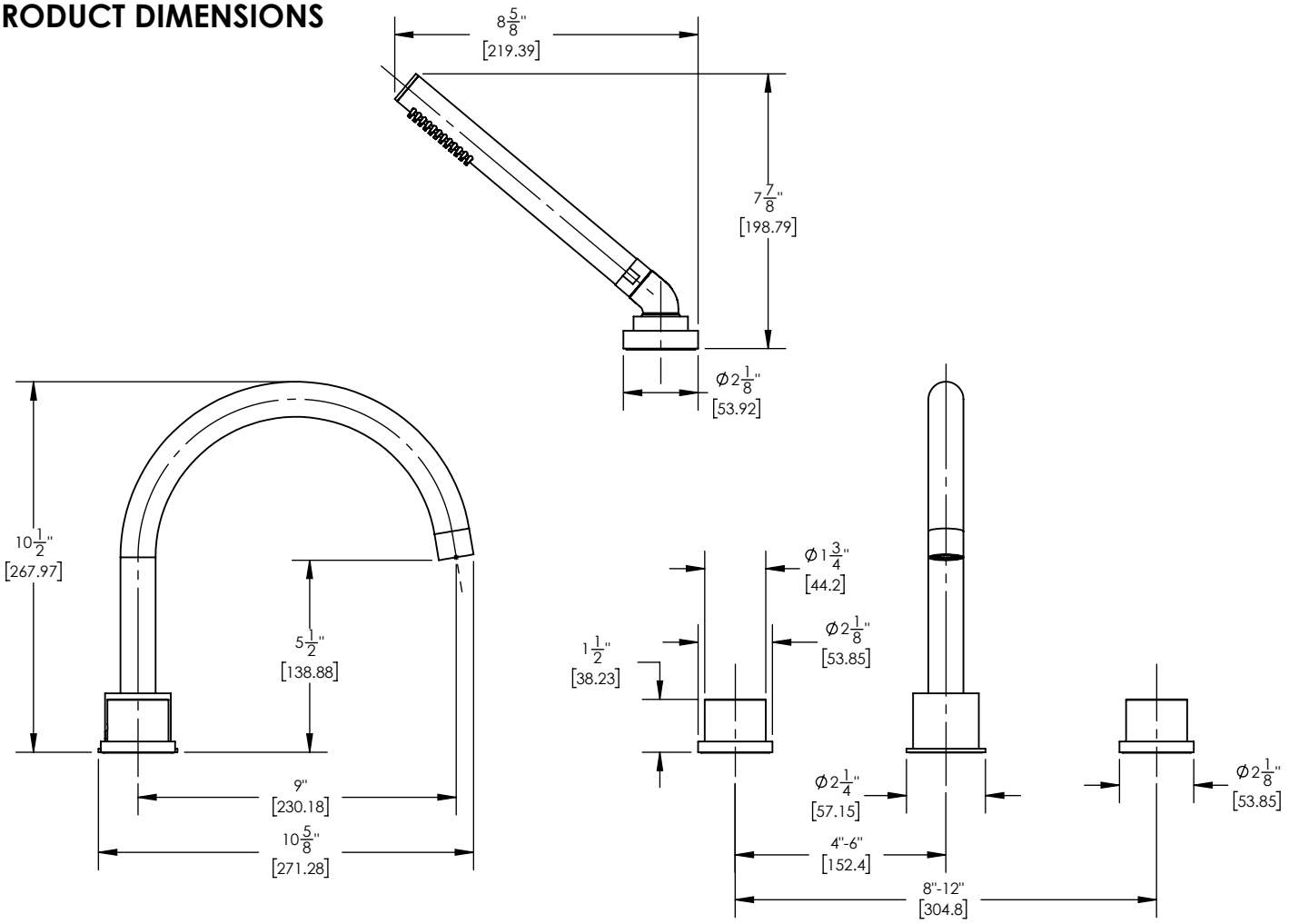

www. phylrich.com

1261 Logan Avenue, Costa Mesa, California 92626.
Phone: 714.361.4800 Fax: 714.617.3120

CODES & STANDARDS

ASME A112.181/ CSA B1251, ASME 112.18.2/ CSA B125.2, ANSI NSF, CEC

WARRANTY

Mechanical Warranty: 10 Years from date of purchase.
Finish Warranty: See catalog for further information.

Rev-