CRIPF258

CRISTINA
RUBINETTERIE

Wall mounted basin mixer LARGE external parts for CRICS200 (right side) with 1"1/4 Up&Down waste and metal plate

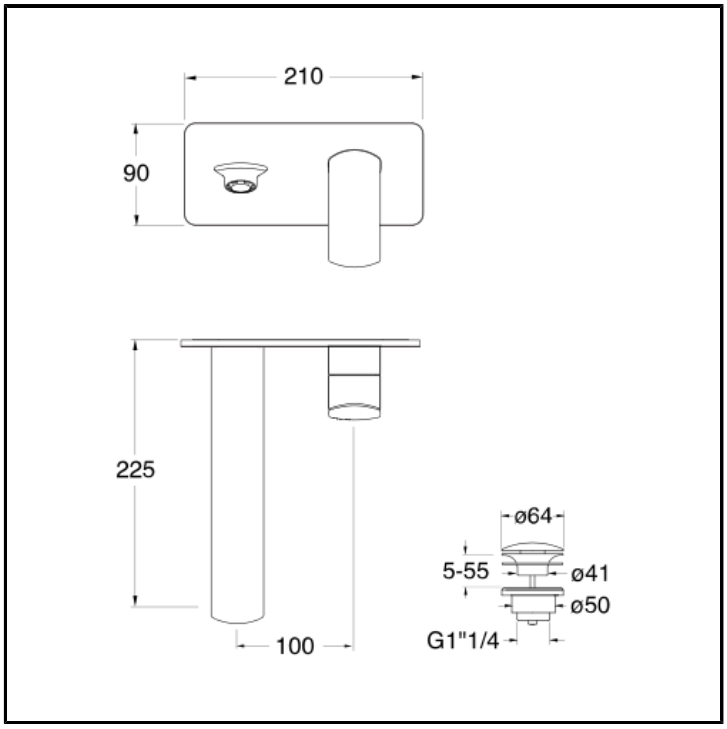

FINITURE

- White matt
- Chrome
- Polished black chrome
- Brushed black chrome
- Polished metallic
- Brushed metallic
- Black matt
- PVD polished rose gold
- PVD brushed rose gold

FEATURES (MODEL NAME SIDE)

- Large

COMMAND

- Monocontrol

INSTALLATION

- Wall

TYPOLOGY

-

ENVIRONMENT

- Bathroom