Tonika 76

91110X/76-CR

TECHNICAL INFORMATION

Sliding rail kit composed of: sliding rail Ø24 mm h 70 cm with soap dish and 1 handle mounting. Non-liming 5 jets inspectable shower in ABS, Ø80. Double spiral flexible hose, 150 cm.
CHROME

FEATURES

rain jet

hydromassage jet

rain jet + hydromassage

soft shower jet

rain jet + soft

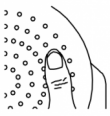
Non-liming

esploso tonika 2

PICTURE

TECHNICAL DRAWING

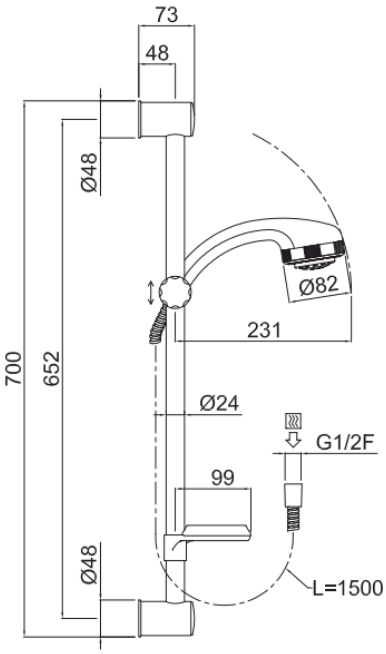

SPARE PARTS

FINISHINGS