CRIQD326

CRISTINA
RUBINETTERIE

Bidet mixer with 1"1/4 pop up waste

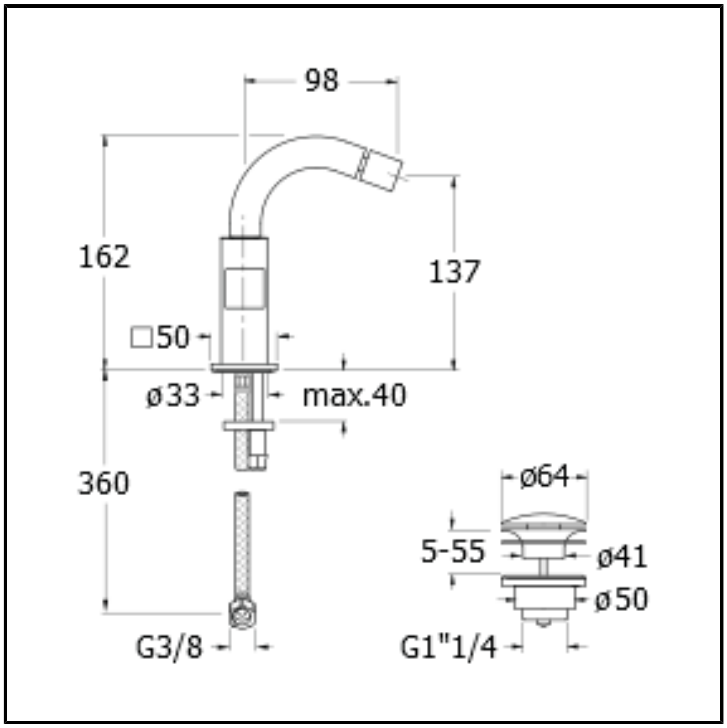

FINITURE

Chrome

FEATURES FROM TECHNOLOGIES

•

COMMAND

- Bicomando

INSTALLATION

- Top

TYPOLOGY

•

ENVIRONMENT

- Bathroom