MODEL FILENAME : WASHCP

DRAWING FILENAME : WASHCP - SP

REV	DESCRIPTION	DATE	BY	ECA

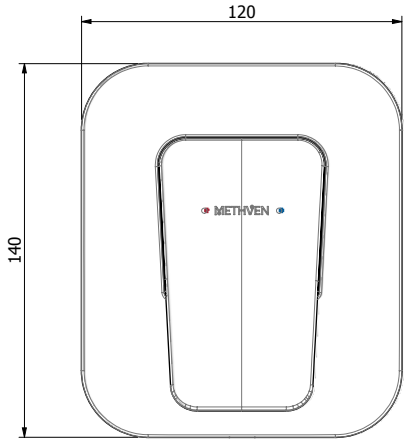

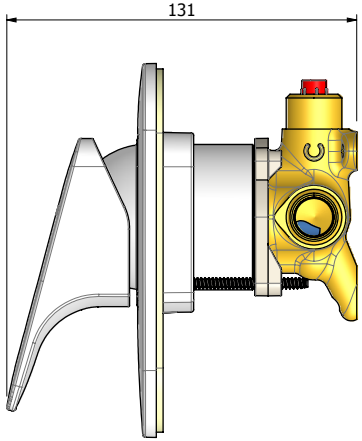

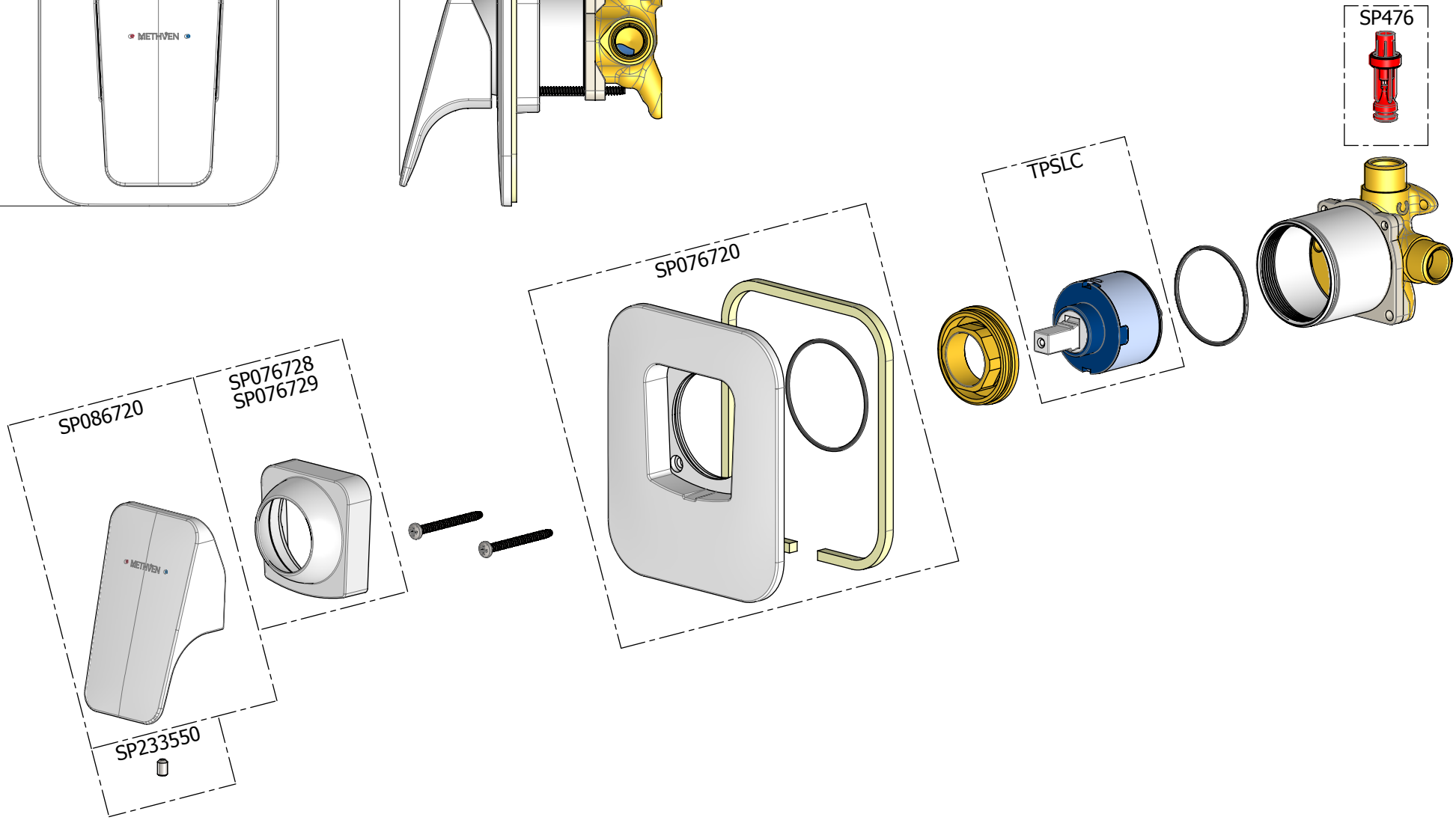

Process Control Notes:

SC = Significant Characteristics
CS = Customer Significant Features
▽ = Safety Critical Features

All identified features are required to be produced with a process Cpk ≥ 1.33

Dimensions in mm

Scale: 1:2

DO NOT SCALE

TOLERANCES
UNLESS SPECIFIED OTHERWISE

LINEAR: 0 ± 0.4; 0.0 ± 0.2; 0.00 ± 0.1
ANGLES ± 3°
SURFACE FINISH: 1.6

CONCENTRICITY ◎ 0.1
ALL Ø ABOUT COMMON CENTRELINE

DRAWN:	C Bauer 7/06/2016	CHECKED:	Select checked by
MATERIAL:	Refer parts	MASS:	1793 g
COLOUR:	Refer parts	FINISH:	Refer parts
DESCRIPTION:	**Waipori All Pressure Shower Mixer - SP**		

mETHvEN LIMITED
Private Bag 19996, Auckland 1746
447 Rosebank Road, Avondale,
Auckland 1026
PH (+649) 829-0429 FAX (+649) 829-0439

Sheet 1 of 1

Sheet size A3

DWG No **WASHCP** REV **A**

MVN_A3_PRODUCT Rev 0.4

THIS DRAWING AND ITS ANNOTATIONS, COPYRIGHT THEREIN AND INFORMATION PORTRAYED IS THE EXCLUSIVE PROPERTY OF METHVEN LIMITED