CRIQE320

CRISTINA
RUBINETTERIE

Bidet mixer with 1"1/4 Up&Down waste

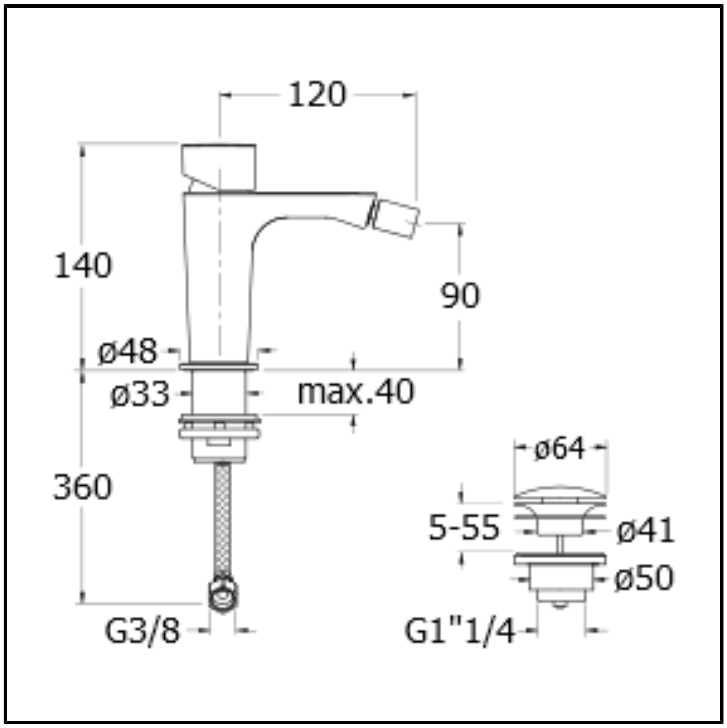

FINITURE

Chrome

FEATURES FROM TECHNOLOGIES

-
-

COMMAND

- Monocontrol

INSTALLATION

- Top

TYPOLOGY

-

ENVIRONMENT

- Bathroom