CRIQS227

CRISTINA
RUBINETTERIE

Basin mixer MEDIUM with 1"1/4 Up&Down waste

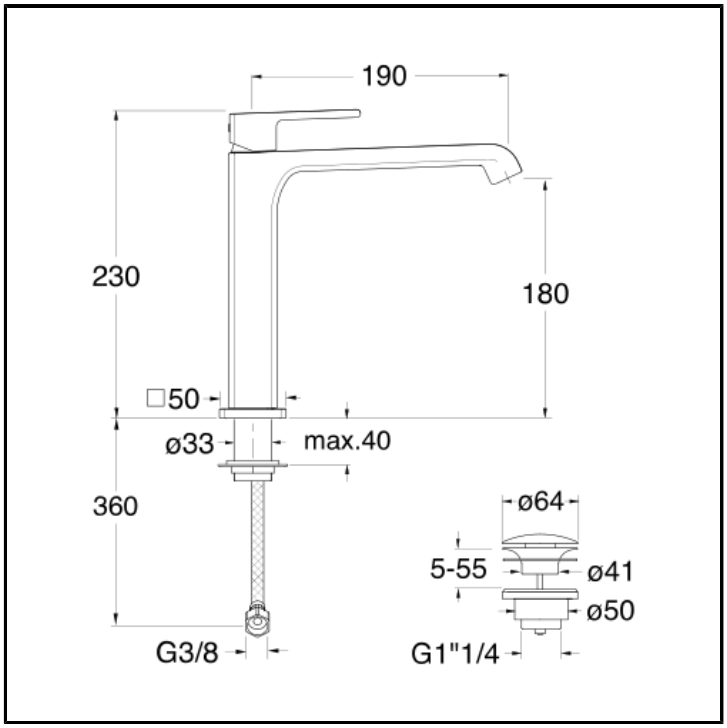

FINITURE

- White matt
- Chrome
- Polished black chrome
- Brushed black chrome
- Polished metallic
- Brushed metallic
- Black matt
- PVD polished rose gold
- PVD brushed rose gold

FEATURES (MODEL NAME SIDE)

- Medium

COMMAND

- Monocontrol

INSTALLATION

- Top

TYPOLOGY

-

ENVIRONMENT

- Bathroom