CRIQS321

CRISTINA
RUBINETTERIE

Bidet mixer with 1"1/4 pop up waste

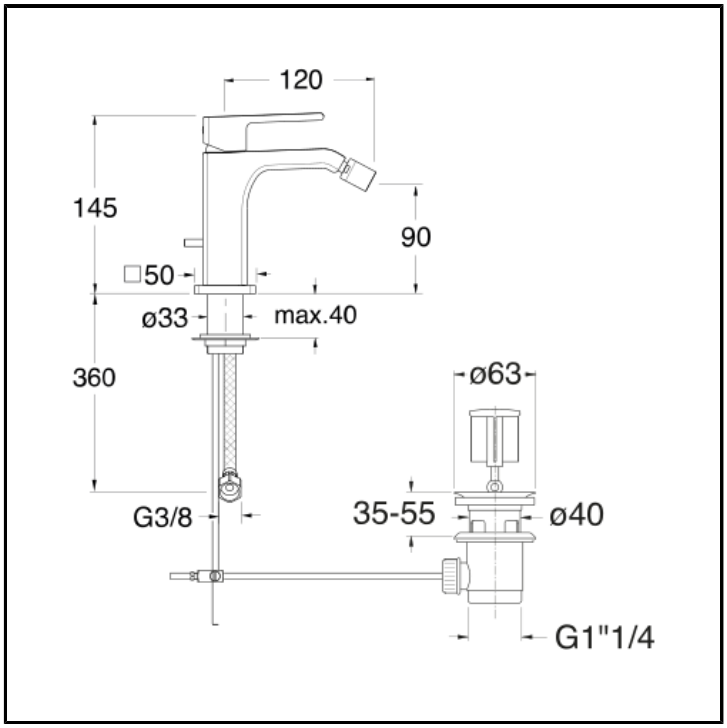

FINITURE

- White matt
- Chrome
- Polished black chrome
- Brushed black chrome
- Polished metallic
- Brushed metallic
- Black matt
- PVD polished rose gold
- PVD brushed rose gold

COMMAND

- Monocontrol

INSTALLATION

- Top

TYPOLOGY

-

ENVIRONMENT

- Bathroom

CRISTINA S.r.l. Via Fava, 56 28024 Gozzano (NO) Italy
Tel. +39.0322.9545 | Fax +39.0322.956556 | info@cristinagroup.com
C.F e P.Iva. 00309260032 | Capitale Sociale 1.000.000 I.V. | Registro Imprese 00309260032 | Rea NO117362