CRIUC222

CRISTINA
RUBINETTERIE

Basin mixer TALL with 1"1/4 Up&Down waste

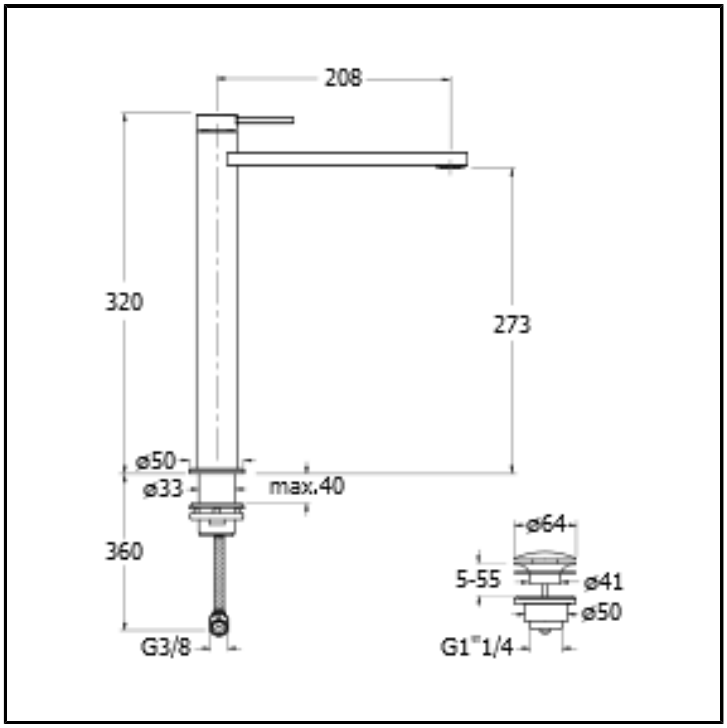

FINITURE

Chrome

FEATURES (MODEL NAME SIDE)

- Tall

FEATURES FROM TECHNOLOGIES

-
-
-

COMMAND

- Monocontrol

INSTALLATION

- Top

TYPOLOGY

-

ENVIRONMENT

- Bathroom