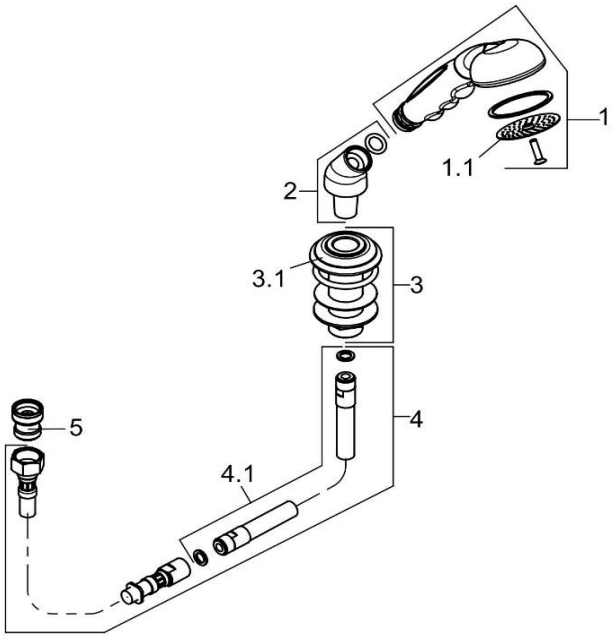

2705105		Brausegarnitur	Shower Combination
1	7529505-00	HANDBRAUSE	HANDSHOWER
1.1	85503405-00	SIEB	MESH
2	7600605-00	BRAUSEHALTER	SHOWER HOLDER
3	7601105-00	SCHLAUCHDURCHFÜHRUNG	GUIDING SHAFT FOR FLEX HOSE
3.1	92306005-00	ROSETTE	ESCUTCHEON
4	7680400-00	BRAUSESCHLAUCH	SHOWER HOSE
4.1	7668305-00	BRAUSESCHLAUCH	SHOWER HOSE
5	7642000-00	RÜCKFLUSSVERSCHRAUBUNG	BACK FLOW PREVENTER COUPLING